NO. 44 NOTES FROM THE SHOP $2.50

Woodsmith®

TECHNIQUES:
MITER/DOVETAIL KEY
WORKING WITH BURL VENEER

Woodsmith®

Number 44 April, 1986

Editor
Donald B. Peschke

Design Director
Ted Kralicek

Assistant Editors
Steve Krohmer
Douglas L. Hicks
Douglas M. Lidster

Technical Illustrators
David Kreyling
Mike Henry

Subscription Manager
Sandy J. Baum

Subscription Assistants
Christel Miner
Vicky Robinson
Jackie Stroud

Computer Operations
Ken Miner

Administrative Assistant
Cheryl Scott

Builiding Maintenance
Archie Krause

WOODSMITH (ISSN 0164-4114) is published bimonthly (February, April, June, August, October, December) by Woodsmith Publishing Co., 2200 Grand Ave., Des Moines, Iowa 50312.
WOODSMITH is a registered trademark of the Woodsmith Publishing Co.
©**Copyright 1986** by Woodsmith Publishing Co. All Rights Reserved.
Subscriptions: One year (6 issues) $10, Two years (12 issues) $18. Single copy price, $2.50 (Canada and Foreign: add $2 per year.)
Change Of Address: Please be sure to include both your old and new address.
Second class postage paid at Des Moines, Iowa.
Postmaster: Send change of address notice, Form 3579, to Woodsmith Publishing Co., 2200 Grand Ave., Des Moines, Iowa 50312.

BACK ISSUES

All back issues of *Woodsmith* are still available. Send for a free booklet describing the contents and prices of all back issues.

SAMPLE COPIES

If you have a friend who would like to see a copy of **Woodsmith**, just send the names and address, and we'll send a sample (at no cost).

Sawdust

ABOUT THIS ISSUE. I remember the first time I saw burl veneer — I mean a sheet of real burl veneer in its natural state (not veneer on a piece of furniture that was covered with layers of yellowed varnish and years of darkening). I was amazed at the swirls of color and subtle patterns — certainly one of the marvels of nature.

But as beautiful as they are, I've always had a reluctance to work with veneers. Actually the problem is trying to work with burl veneers the old-fashioned way.

Burl veneer comes in thin, relatively small sheets (about 10" to 16" square) that are dry and incredibly wrinkled. And they're by no means free of cracks, splits, and even holes. It can be disappointing.

It can also be a lot of work if you want to veneer a large surface with burl veneer using hide glue and a veneer press. Right in the middle, up pops a bubble that simply refuses to stick down.

There are two changes that make working with veneers a lot easier. First, I've become a real fan of contact cement. It eliminates the need for a veneer press, and it's especially nice when working with the unruly waves and wrinkles of burl veneer. (We're showing a few tips for working with veneer on page 15.)

The other change is the introduction of flexible veneers. These paper-backed veneers are as close to perfect as you can get with anything made of wood. They're very easy to work with. (Although I hate to say it, but they're even easier than working with Formica.)

If there's a drawback, it's that the flexible veneers are very, very thin. You have to be right on the money, because there's almost no chance to smooth things out by planing or sanding.

If you've been wanting to try a project with veneer, the small box shown in this issue is an easy way to start. After working on the two boxes shown in the photo on page 12, I made another one out of cocobolo with a Carpathian elm burl. Now *that* was fun — and worth the effort to get to know veneers a little better.

DADOES. Over the past couple of years we've been collecting various dado blade sets to get some experience with each set. The differences among the sets are amazing — and somewhat depressing at the same time.

I'm constantly amazed at the poor quality of many of the tools on the market. Sometimes it's a matter of poor design. This is particularly true of those tools aimed at the "sell it quick at a low price" market. They're just not worth having.

But more often than poor design, it's a matter of poor workmanship in producing the tool. Dado blades are a good example. Whether you get a stack set or one of the wobble blades, you're spending enough money that it should do its job well — right out of the box.

The downfall on most of the dado blades we've purchased is the quality of sharpening — it was unacceptably poor. Although this is relatively easy to fix (just take it to a good sharpening shop and hand over about $20), it effectively adds to the cost of the blade. A bargain isn't such a bargain if you have to add $20 just to get it to work the way it's supposed to.

I'm slowly beginning to change my approach toward buying tools. I used to set a limit on the cost. But that can lead to cheap tools and frustration. Now I set a limit on quality. I look for good-to-high quality tools. I pay more, but I'm much happier as I work with the tool.

INSERT ENVELOPE. We've changed the design of the envelope that's inserted in the center of this issue. We've added a few boxes to check if you're having a problem with your subscription.

If your issue is damaged in the mail or has missing pages, we'll be happy to send you a free replacement copy.

Also, if you're receiving duplicate copies, let us know. (This is usually the result of sending in two orders for a new subscription.) We periodically check the entire file to try to find duplicate copies. Although we're able to catch most of them, it's a very time-consuming process. Let us know, and we'll be happy to correct your subscription record.

One other problem is missing issues because of a change in address. (We get hundreds of address changes each month.) The Post Office will forward magazines for only two months after you move. Since *Woodsmith* is a bi-monthly publication, it's easy to miss an issue.

If you change your address, or if we've made a mistake or misspelling on your label, let us know. We'll correct it and send any issues you've missed.

One last thing. From time to time we rent the *Woodsmith* subscriber list to qualified woodworking companies who send out catalogs or information on woodworking tools and supplies. We screen these offers to make sure (as best we can) that it is an offer of interest to woodworkers.

However, if you do *not* want to receive this information, please check the box on the front panel of the envelope and send it in.

NEXT MAILING. The June issue of *Woodsmith* (No. 45) will be mailed during the week of June 23, 1986.

Tips & Techniques

PLAYING CARDS IN THE SHOP

There are times when I need to make a fine adjustment of the router table fence to sneak up on a finish dimension. But loosening the fence and trying to tap it over just a hair never seems to give me the control I'm looking for.

Instead, I use playing cards as gauge shims. (They're exactly 1/100th of an inch thick so three of them equal about 1/32" thickness.) Or, I use a spark plug feeler gauge for extremely fine adjustments.

Start by making a test cut. If it's not quite wide enough, hold a playing card (or more if necessary) against the back right end of the fence and clamp a scrap block to the table tight against the card.

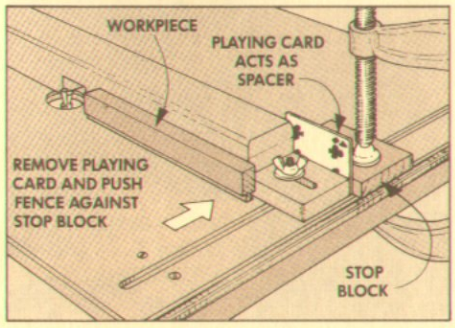

Now loosen the right wing nut on the fence (leave the left one tight), pull the playing card out and push the fence back against the block. This has moved the fence back from its original setting a distance equal to the thickness of the playing card. Finally tighten the wing nut back down.

Now make another pass. If the cut is still not wide enough, continue on with this process until you get a perfect fit. If at any time the cut goes too deep, the process can be reversed by adding cards between the block and the fence.

Albert Best
New Holland, Pennsylvania

LOW-COST MARKING GAUGE

Here's an effective marking/cutting gauge I made for the cost of a few cents with a carriage bolt, a T-nut, a wing nut, and a 2½" square block of 4/4 hardwood.

First, drill a ⅜" hole through the center of the block to accommodate a ⅜" x 4" carriage bolt. Then drill a counterbore part way though the block to accept the T-nut and tap the T-nut into position.

Now grind the top of the carriage bolt flat with a disc sander. Then angle the bolt head in relation to the disc and grind a beveled edge all the way around the head. Finally, sharpen the edge on a sharpening stone.

To set the depth of cut, just turn the bolt in the T-nut. Then to prevent it from moving,

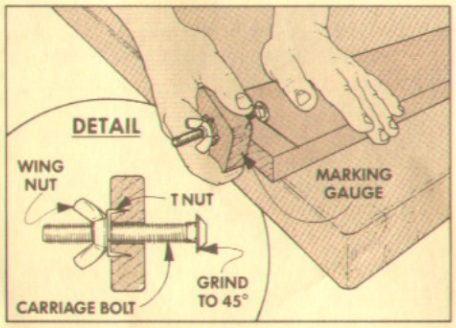

tighten a wing nut in from the back until it's up against the T-nut. It works great for marking and light cutting both with and across the grain.

Joe Vercillo
Tucson, Arizona

MASK OUT GLUE

I recently made a number of box joint boxes that were to be stained. I found on the first box that it was quite a chore to remove any excess glue from the inside corners of the box so the stain would take uniformly. It was especially difficult to chip away on a small box where I couldn't get a chisel inside.

Then I came upon the idea of using masking tape on the inside of each box to seal off the glue. Before gluing, just apply the tape flush with the bottom of the slots. Then,

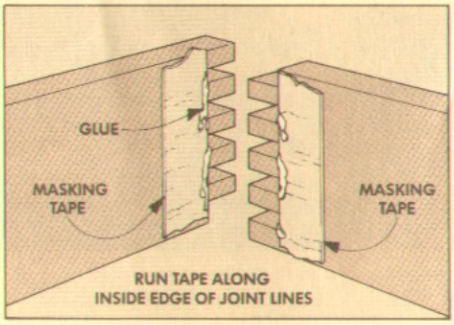

after the glue sets up, simply remove the tape with the excess glue on it.

Kenneth R. Cary
Binghamton, New York

Editor's Note: Cary's tip is a good way to seal out excess glue in many situations (including putting in drawer and box bottoms and the small boxes featured in this issue.) But you have to be careful if you plan to test the corner for square since the thickness of the masking tape can throw off a try square or a squaring jig. Add extra strips of masking tape as necessary so the sides can be squared up.

CLEANING UP BOX JOINT SLOTS

I use a different technique to clean up the rough bottoms of box joint slots left by a dado set (see *Woodsmith* No. 42, page 20). I do it with my bandsaw.

Start by clamping a straightedge stop to the bandsaw table behind the blade. The stop has to be perpendicular to the saw blade. To do this set the bandsaw miter gauge for 90°. Then put it in the miter gauge slot and hold it tight against the stop while clamping the stop to the table.

The distance from the front of the stop to the front (cutting edge) of the saw teeth should equal the full depth of the box joint slots. This is the thickness of the adjacent piece in the box joint.

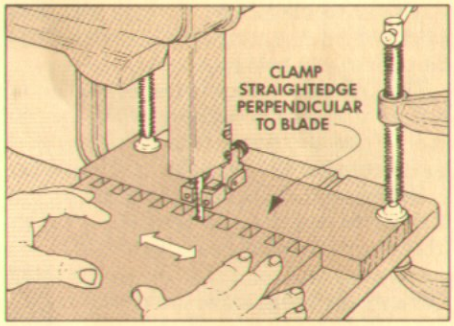

Once the stop is in position, bring one of the dado slots in the workpiece into the blade until it hits the stop. Then move it lightly side-to-side so you're just cleaning up the bottom of the slot until it's smooth, flat, and square. Continue on cleaning up the rest of the slots with this same technique.

Don Leird
Benton, Arkansas

Editor's Note: If you don't have a bandsaw, you can use this same technique with a sabre saw clamped under a router table (see Woodsmith No. 30, page 3 for a tip on fastening a sabre saw to a router table). Or use a hand-held sabre saw and a straightedge stop clamped across the workpiece so it stops the front edge of the sabre saw base. Either way be sure to have a sharp, fine-tooth blade on the sabre saw.

SEND IN YOUR IDEAS

If you'd like to share a woodworking tip with other readers of *Woodsmith*, send your idea to: *Woodsmith*, Tips & Techniques, 2200 Grand Ave., Des Moines, Iowa 50312.

We pay a minimum of $10 for tips, and $15 or more for special techniques (that are accepted for publication). Please give a complete explanation of your idea. If a sketch is needed, send it along; we'll draw a new one.

Recipe Card Box

A DOUBLE-DRAWER FOOD FILE

It's interesting how a project can develop from a simple idea. This recipe card box is a good example. We were originally thinking of a simple one-drawer box to hold 3x5 cards.

But then some of the "cooks" on our staff took a look at the original sketches and said there wasn't enough room for all their recipe cards. So we added another drawer.

Next, instead of making just a plain box for these drawers we decided to dress up the corners with miter and dovetail key joints (explained in detail on pages 10-11). And since the box was joined this way, why not make the drawers with this joint?

By this time the cooks approved of the second drawer, but started talking about the way their cookbooks get covered with flour when laid out on a countertop. So we added a tilt-up frame to hold cookbooks.

This called for a second frame around the bottom of the box to balance off the appearance of the top frame...As I said, project designs tend to develop as you get into them.

But one of the nice features of this project is that you can leave off part of the design (the tilt-up cookbook holder) and still have a useful project (the recipe box). And that's where I began: the basic box.

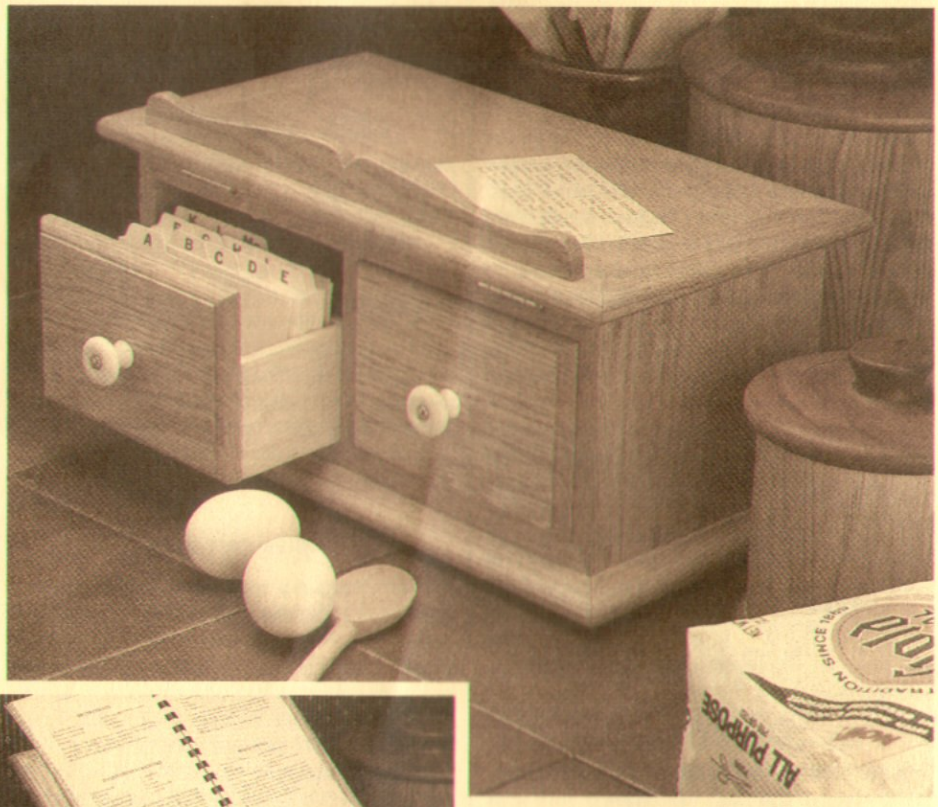

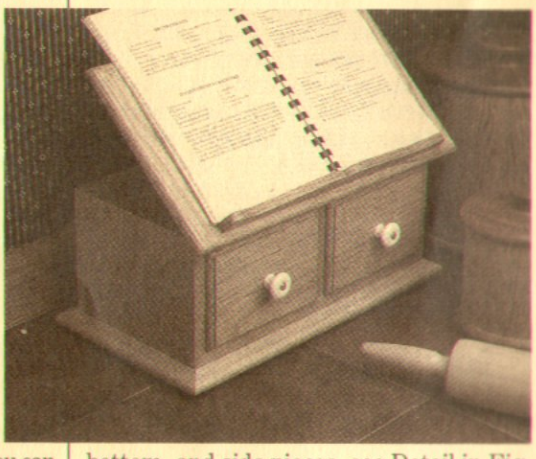

THE BOX

To build the box, I started by resawing enough stock to about 9/16" thick for the top and bottom (A), the two sides (B), and the divider (C). (Note: You can eliminate resawing if you have access to ½"-thick stock.)

After the stock is resawn, edge-glue one blank for the top and bottom pieces to rough dimensions of 7¼" wide and 28" long. Then edge-glue another blank for both side pieces and the divider to rough dimensions of 7¼" wide and 16" long.

Shop Note: Instead of edge-gluing you can use 7¼"-wide stock. But since wider boards tend to warp, I think it's better to rip them down or use narrower boards and edge-glue them together. Then after the glue dries, plane the blanks flat and down to ½" thick.

CUTTING TO ROUGH SIZE. When the blanks are planed to ½", rip them both to a uniform width of 6½". Now cut the top and bottom pieces (A) to rough lengths of 14" from the long blank. And cut off two 5½" (rough length) sides (B) from the short blank. Save the remaining 5" piece (rough length) for the divider (C).

RABBET FOR THE BACK. Once all the pieces are cut to rough length, cut a ⅜"-wide by ¼"-deep rabbet for the plywood back on the inside back edge of the top, bottom, and side pieces, see Detail in Fig. 1. The ⅜"-wide rabbet allows a decorative set-back for the ¼" plywood back (D).

CUTTING THE MITERS. Next, cut cross miters on the ends of each side piece (B) so that the final length is 5" from long point to long point of the mitered ends. (See page 10 for an explanation on cutting these miters.) Note: Be sure to cut the miters so they're on the same face as the rabbets.

Then miter the ends of the top and bottom pieces (A) so that the final length is 13". Note: This length is based on having two drawers with 3x5 cards inside.

DADO FOR DIVIDER. Once all the miters have been cut, rout a ¼" by ¼" dado centered across the inside face of the top and bottom pieces, see Fig. 2. (Note: I

MATERIALS LIST

Overall Dimensions: 14⅜" w x 7¾" d x 7¾" h

A	Box Tops/Bottoms (2)	½ x 6½ - 13
B	Box Sides (2)	½ x 6½ - 5
C	Box Divider (1)	½ x 6⅛ - 4½
D	Box Back (1)	¼" ply. cut to fit
E	Drawer Sides (8)	¼ x 2½ - 5¾
F	Drawer Bottoms (2)	¼" ply. cut to fit
G	Drawer Dividers (2)	¼ x cut to fit
H	Kickers (2)	¼ x 2 - 3 31/32
I	False Dr. Frts. (2)	½ x 3 31/32 - 5 11/16
J	Frame Frts./Backs (4)	13/16 x 1½ - 14¼
K	Frame Sides (4)	13/16 x 1½ - 7¾
L	Top Panel (1)	¼" ply. cut to fit
M	Bookstop (1)	⅜ x 1¼ - 12
N	Supports (3)	½ x ½ - cut to fit

CUTTING DIAGRAM

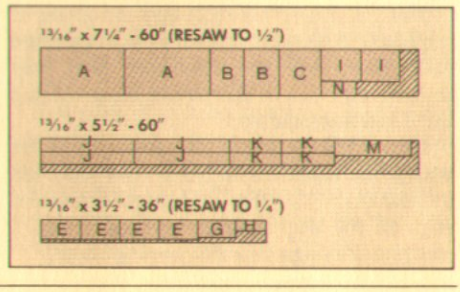

originally built the box with a stopped dado, see photo, but changed the design to a through dado to make it easier to cut.)

To make the dado for the divider, mount a ¼" straight bit on the router table, raise it to a height of ¼", and move the fence so it's 6½" from the *center* of the bit. (Note: The 6½" measurement is half the 13" length.)

Now rout the dado across the inside face of the top and bottom pieces, see Fig. 3. Then rotate the workpiece 180° and make another pass. (This two-pass method ensures that the dado is centered. It's okay if the dado is a little wider than ¼". The tongue that fits in the dado can be adjusted later.)

BACK. After the dadoes are routed in the top and bottom, cut the ¼" plywood back (D) to fit in the rabbets. Then dry assemble the box with the back in place.

DIVIDER. To determine the length of the divider, measure the distance from the bottom of the center dado in the top piece to the bottom of the center dado in the bottom piece. In my case this measured 4½", see Fig. 4.

To determine the width of the divider, measure the distance inside the box from the plywood back to the front edge of the top and bottom pieces. In my case this measured 6⅛", see Fig. 4.

After cutting the divider to final size, rout tongues on the thickness of both ends, see Fig. 4. I routed these tongues on the router table, see Fig. 5, sneaking up on the final thickness until the tongue just fits in the center dado.

ASSEMBLY. Once the tongues fit snugly into the dadoes, glue up the box, divider, and plywood back making sure the divider is flush with the front edges. Then clamp it with a couple of band clamps.

DOVETAIL SLOTS AND KEYS

When the box was dry I added the dovetail keys. To do this I used a ¼" dovetail router bit raised 5/16" above the table, see Detail in Fig. 6. (A ⅜" or ½" dovetail bit would work just as well.) This technique is shown on pages 10-11.

DOVETAIL SLOTS. First, position and rout the center slot across all four corners. Then move the fence so the center of the bit is 1⅞" from the jig and rout the next set of slots, see slot locations in Fig. 7.

After these slots are routed, don't change the fence but flip the box so the opposite face is against the front of the jig and rout the slots on the other side. Finally, move the fence so the center of the bit is ½" from the jig and rout the remaining slots.

DOVETAIL KEYS. After all the slots are routed, make the dovetail keys using the router table (once again, see pages 10-11). Cut the keys about 1½" long and then glue them into the slots.

After the keys are dry, cut them off close to the surface with a fine-toothed saw and then trim them flush with a sharp chisel.

FIGURE 1

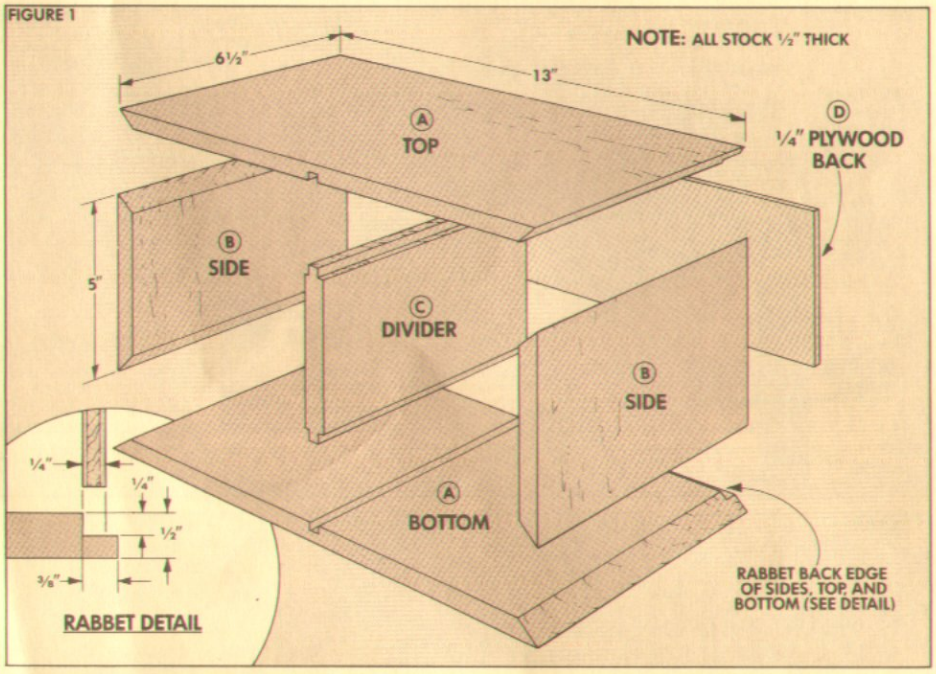

FIGURE 2

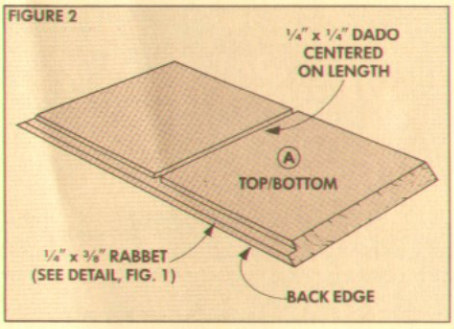

FIGURE 3

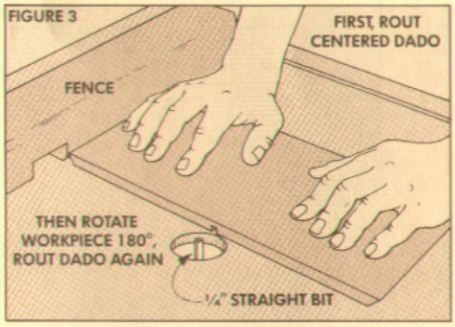

FIGURE 4

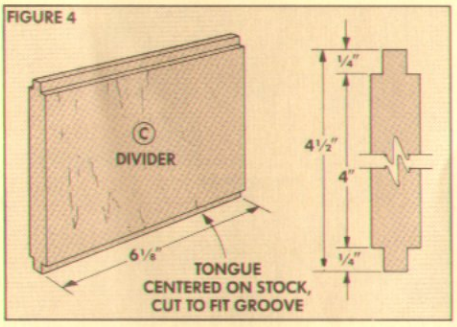

FIGURE 5

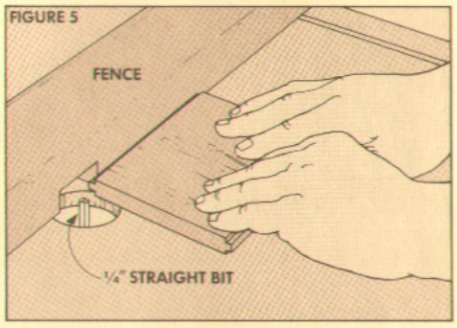

FIGURE 6

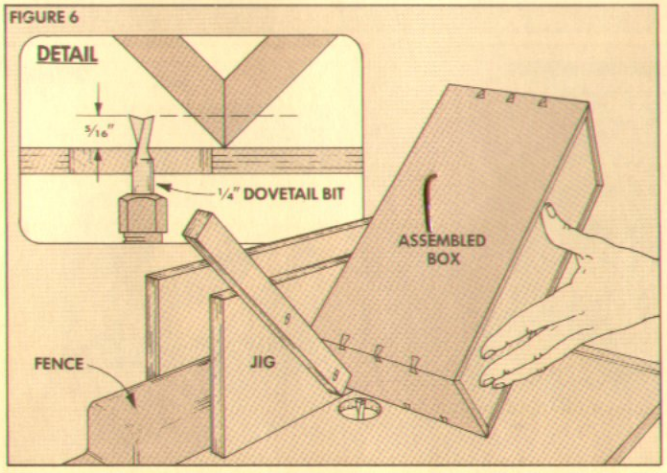

FIGURE 7

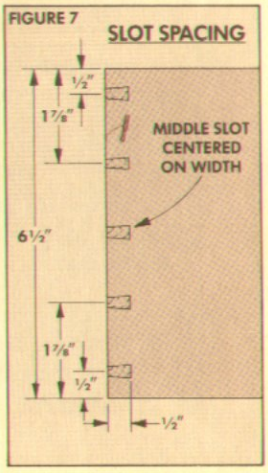

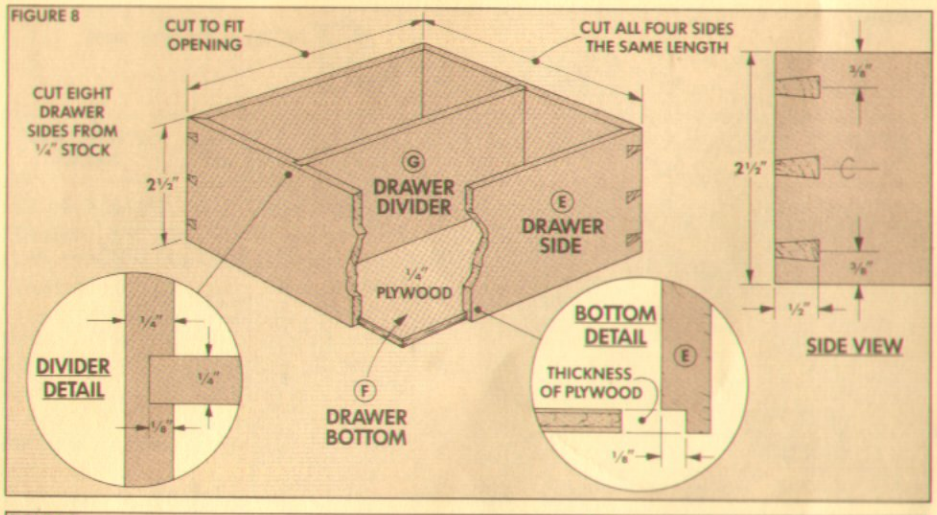

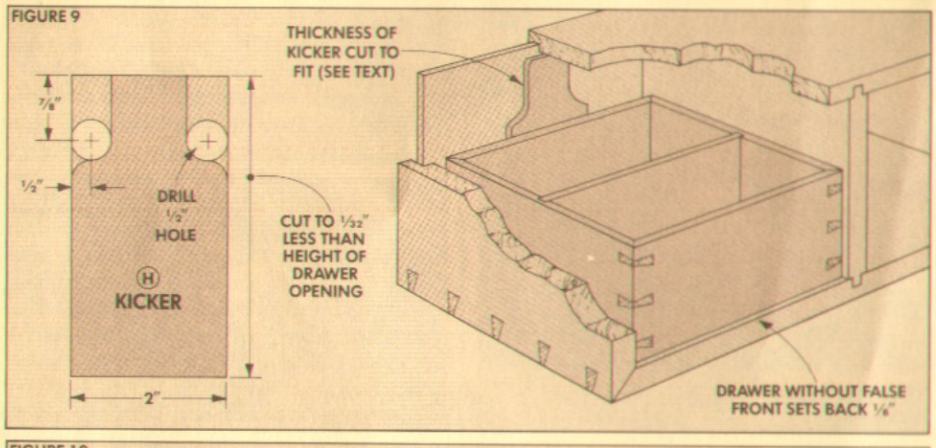

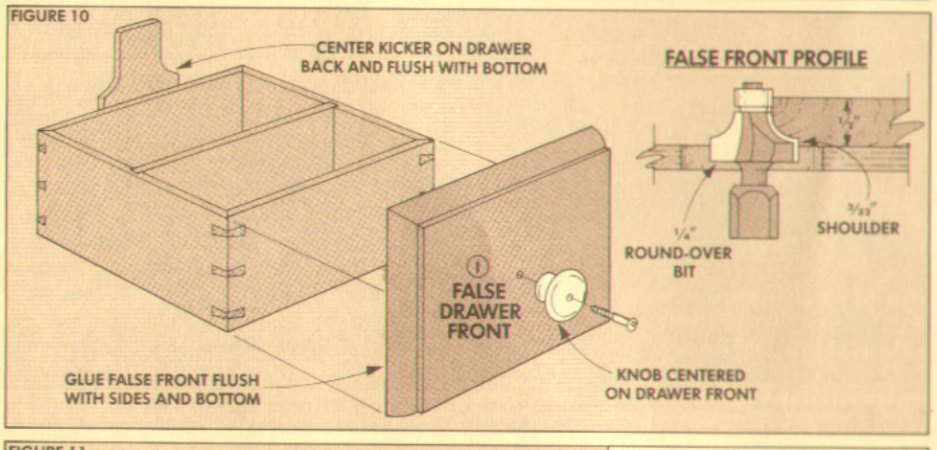

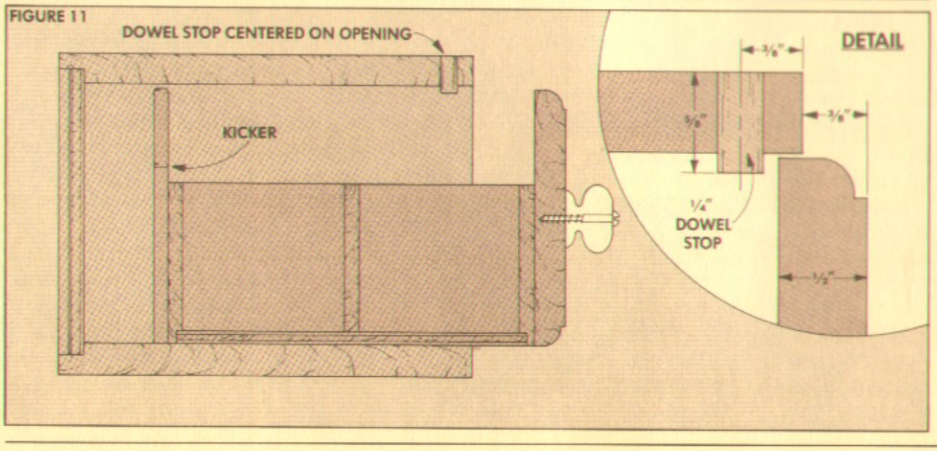

THE DRAWERS

After the box is complete, the drawers can be built to fit in the openings. I began work on the drawers by cutting eight drawer sides (E) from ¼"-thick resawn stock to a finished width of 2½" and a *rough* length of 6¼".

BOTTOM RABBET. Before cutting the sides to final length, cut ⅛"-deep rabbets on the bottom edge of all eight pieces just wide enough for the ¼" plywood drawer bottoms, see Bottom Detail in Fig. 8.

LENGTH OF SIDES. After the rabbets are cut, the drawer sides can be cut to final length. Measure the width of the drawer opening in the box, see Fig. 9. (In my case, the opening measured 5¾".) Now cut cross miters on the ends of all eight pieces so the length from point to point of the miters equals the width of the opening. (Note: The drawers are square so all eight sides are the same length.)

DIVIDER DADOES. After all eight drawer sides have been mitered to length, rout centered dadoes across four of the pieces (the sides of the two drawers) to accept removable dividers (G), see Divider Detail in Fig. 8.

BOTTOMS. Next, cut the ¼" plywood bottoms (F) to fit in the rabbets. Then glue and clamp the drawers with the bottoms in place. Since the drawers fit tightly into the opening, check that they're square.

DOVETAIL KEYS. When the drawers are dry, add the dovetail keys using the same technique as on the box, see key locations in the Side View, Fig. 8.

After the keys are glued in and cut off flush, sand or plane the sides slightly so the drawer slides into the opening with about 1/32" clearance on each side.

DIVIDERS. Now cut removable dividers (G) to slide in the dadoes in each drawer, see Fig. 8.

KICKERS. To keep the drawer from tipping down as it's pulled out, I added a kicker (H) to the back of each drawer, see Fig. 9. The kicker also acts as a spacer to keep the drawer from going too far back into the box.

To determine the thickness of the kicker I pushed the drawer all the way into the box and measured the set-back. In my case this was ⅜". I wanted to add a ½"-thick false drawer front and have it stick out ⅜" from the front edge of the box, see Detail in Fig. 11. This meant the kicker would have to be ¼" thick.

Cut two kickers to that thickness and to the shape shown in Fig. 9. Then, glue the kicker to the center of the drawer back so it's flush with the drawer bottom.

FALSE DRAWER FRONTS. To complete the drawers, cut two false drawer fronts (I) from ½" stock. The width is equal to the height of the drawer opening minus 1/32" and the length matches the front of the drawer, see Fig. 10.

Now rout a ¼" round-over profile with a 3/32" shoulder around the front face of the false drawer fronts, see Profile in Fig. 10. Then glue the fronts to the drawer so they're flush with the sides and bottom.

KNOBS. When the drawer fronts are dry, drill and then screw a porcelain knob to the center of each front, see Fig. 10.

DOWEL STOPS. To keep the drawer from pulling out too far, drill ¼" holes through the top of the box to accept ⅝"-long dowel stops, see Detail in Fig. 11. (These stops catch the kickers.) Center the holes above each of the drawer openings.

THE FRAMES

Once the drawers were complete, I added a tilt-up cookbook holder to the top and a matching frame to the bottom.

CUTTING TO ROUGH SIZE. Start by ripping all eight frame pieces from 4/4 (13/16" thick) stock to a final width of 1½". Then cut the four front/backs (J) to a rough length of 15" and the four sides (K) to a rough length of 8½", see Fig. 12.

RABBET THE TOP FRAME. After the frame pieces are cut to rough size, cut a ⅜"-wide rabbet in the four top frame pieces to accept the ¼" plywood top panel (L), see Top Frame Detail in Fig. 12.

MITER TO LENGTH. Now the frame pieces can be cut to final length. Measure the length and depth of the box and cut miters on the ends of the frame pieces so the finished point-to-point lengths are 1¼" longer than the box, see Fig. 12. (This allows a ⅝" overhang on each side.) In my case this made the front/backs 14¼" long and the sides 7¾" long.

TOP PANEL. Once the pieces are cut to length, glue up the frames. Then cut the ¼" top panel (L) to fit in the rabbets of the top frame and glue it in place.

PROFILES. After the frames are assembled, use the router table with a fence to rout profiles on the top and bottom edges of each frame, see Fig. 14. First, rout an ogee profile with a 9/32" point-cutting ogee bit (Sears No. 9 HT 25583). Then flip the frame over and rout a ¼" round-over on the other side, see Fig. 13.

BOOKSTOP. The next step is to add a bookstop (M) to the top frame. Begin by routing a stopped ¼" groove near the top front edge of the top frame, see Fig. 15.

Next, cut a blank for the bookstop from ⅜"-thick stock to 1¼" wide by 12" long. Cut a centered tongue on the bottom edge of this piece to fit the groove (see Detail in Fig. 17), and notch both ends of the tongues to match the length of the groove.

Finally, make a pattern from the grid drawing in Fig. 16 and trace it on the blank. (Make sure it's lined up with the shoulder of the rabbet, see Fig. 17.) Then cut the bookstop to final shape. (Since it's easier to continue work without the bookstop in place, don't glue it in yet.)

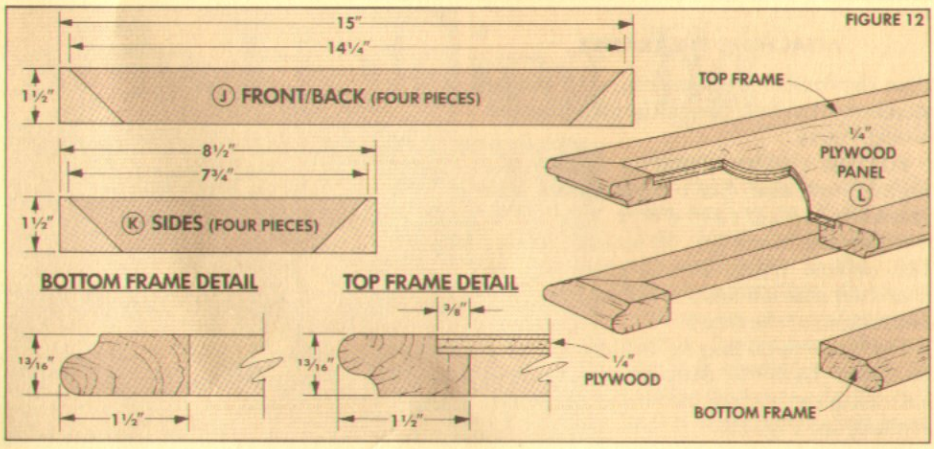

FIGURE 12

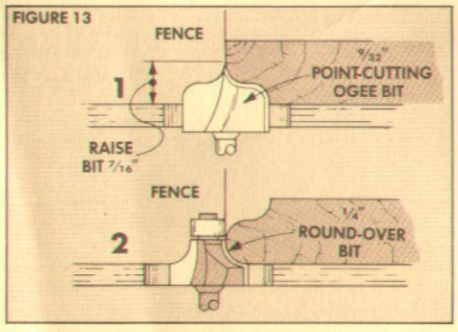

FIGURE 13

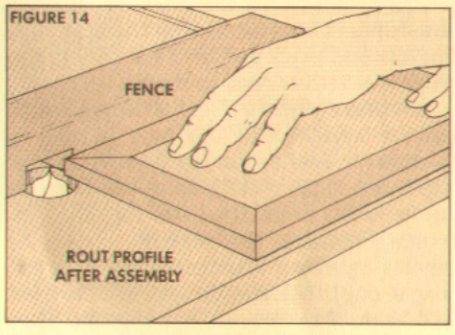

FIGURE 14

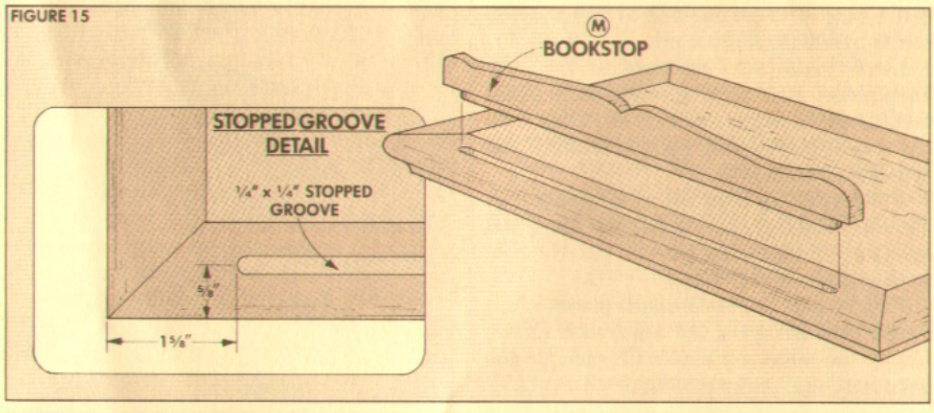

FIGURE 15

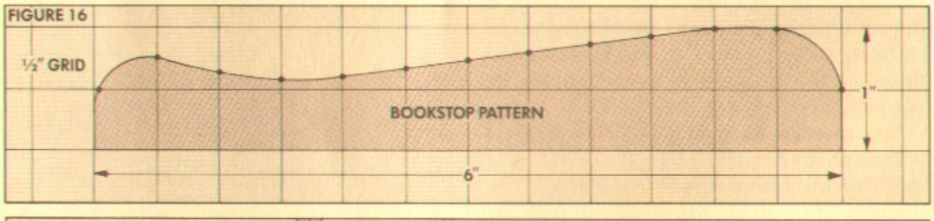

FIGURE 16

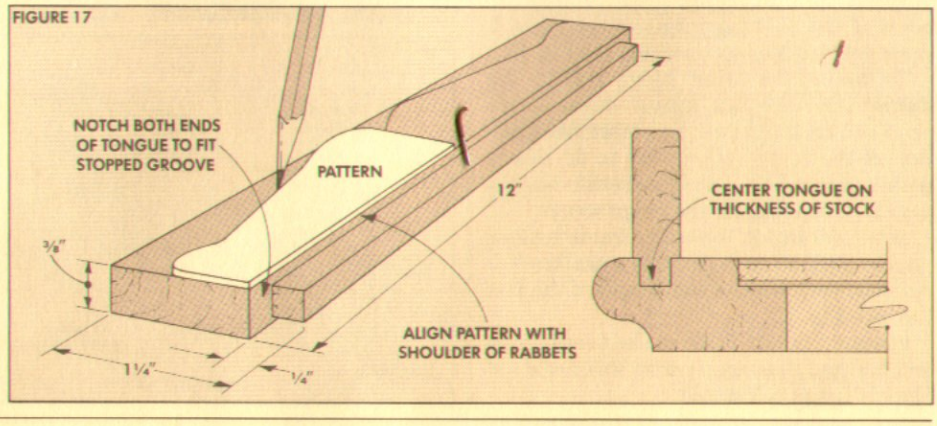

FIGURE 17

ATTACHING THE FRAMES

Once the frames are complete, they can be attached to the box. I began by attaching the bottom frame.

BOTTOM FRAME. Start by drilling six slightly oversize (7/32") shank holes and countersinks for #8 x 1¼" Fh. woodscrews, see Figs. 18 and 19. (Note: The bottom frame is not glued on, so oversized shank holes allow for expansion/contraction of the box.)

The box sits on four ½" buttons that act as "feet." Drill 3/16"-deep holes for these buttons in the bottom frame and glue them in place, see Fig. 19.

After the buttons are glued in, position the frame so it's centered on the bottom of the box and mark and drill 3/32" pilot holes. Then screw the frame to the bottom.

SUPPORT SYSTEM. Before the top frame can be attached to the box, a support system (N) is added to the back side of the top frame. This system holds the frame at about 45° for a cookbook, see Fig. 23.

Start building the support system by cutting a piece of ½" stock to 1¾" wide and long enough to fit snugly between the front and back of the frame, see Fig. 20. Then drill a hole ¼" from one end to accept a 16d common nail for a pivot pin.

Next, make two rip cuts to slice the workpiece into thirds with each piece measuring ½" wide, see Fig. 20. Then trim the *middle* piece down to a length of 4½" and round over both ends.

After rounding over the middle piece, put all three back together, line up the holes, and epoxy a 1½" piece of a 16d nail into the hole so the middle arm pivots.

Finally, glue the two *outside* pieces to the center (underside) of the top frame. (Note: Clamp the outside pieces with enough gap between them so the middle piece pivots.)

MORTISES. Once the support system is glued in place, locate the mortises for the 1½"-long hinges, see Fig. 21. Position the hinge so the knuckle is centered on the front edge of the box, see Fig. 22.

Now mortise deep enough so the knuckle is flush with the top of the box. Then drill holes for the hinge screws, and screw the hinges to the box. (Note: I had to file off the point of the ½"-long brass screw since it came out into the box opening, see Fig. 22.)

To mount the other hinge leaf to the frame, turn the box upside down so it's centered on the frame and mark the position of the hinge. (One way to do this is with locator pins, see *Woodsmith* No. 42, page 8.) Then drill for the hinge screws.

SUPPORT HOLE. When the frame is tilted up, the support arm fits into a shallow ¾"-dia. hole centered on the length of the box top, see Fig. 23.

FINISH. Finally I glued the bookstop in and finished the project with three coats of Hope's Tung Oil Varnish.

FIGURE 18

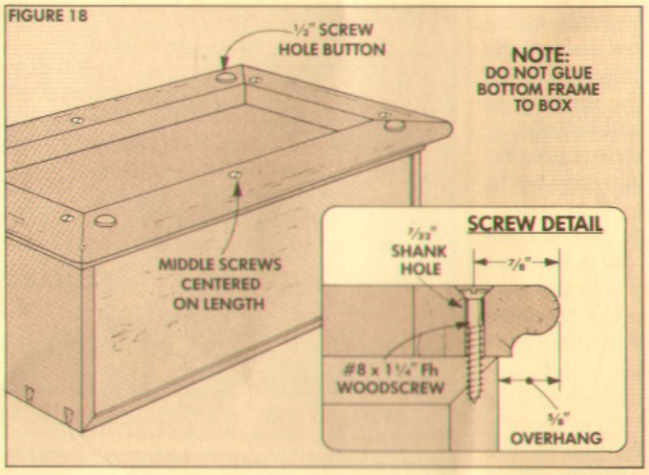

FIGURE 19

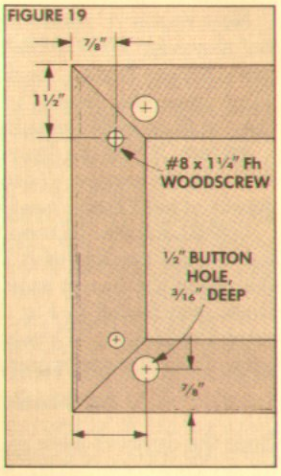

FIGURE 20

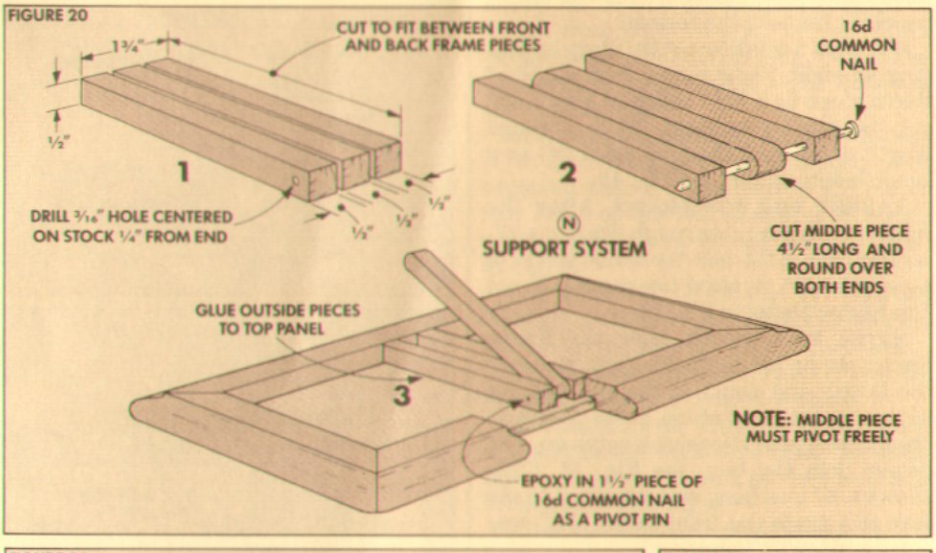

FIGURE 21

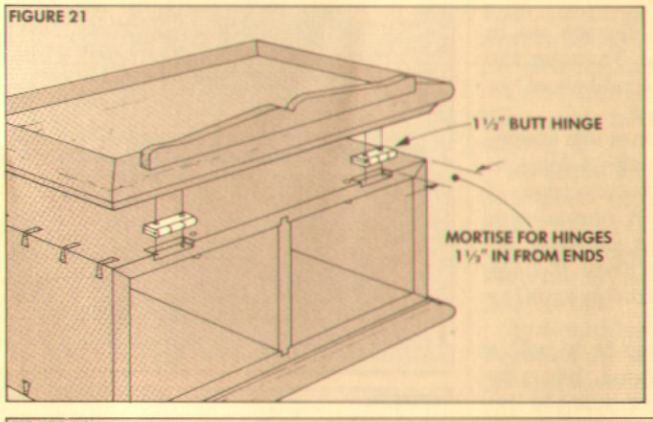

FIGURE 22

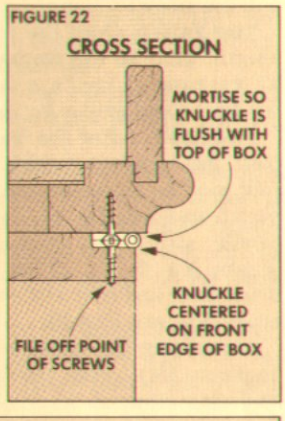

FIGURE 23

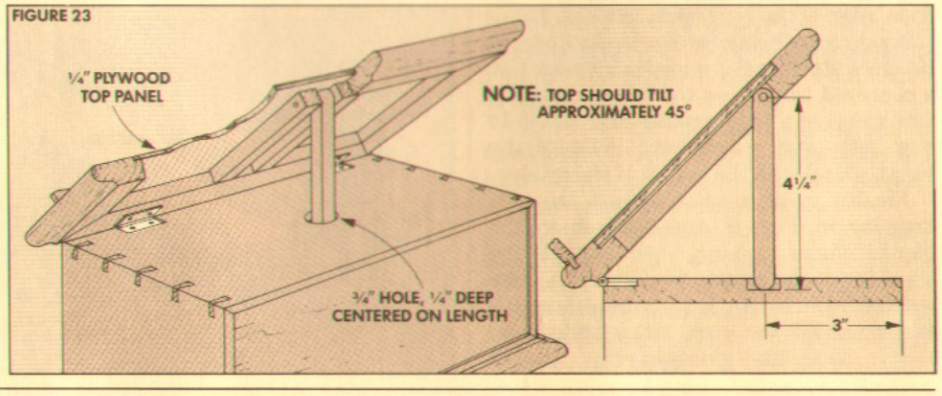

Adjustable Holding Jig

When it came time to make the dovetail key joint shown on page 10, I got out our standard jig that rides over the table saw rip fence. I figured it could be modified for the router table.

But it wouldn't fit over the router table fence — and to be quite honest, I've never been real happy with that jig. It doesn't ride smoothly along the fence since the distance between the jig's two plates has to be the thickness of the fence plus *exactly* a smidgeon for a smooth ride. What I needed was a jig that could be adjusted to ride over either a table saw or router table fence.

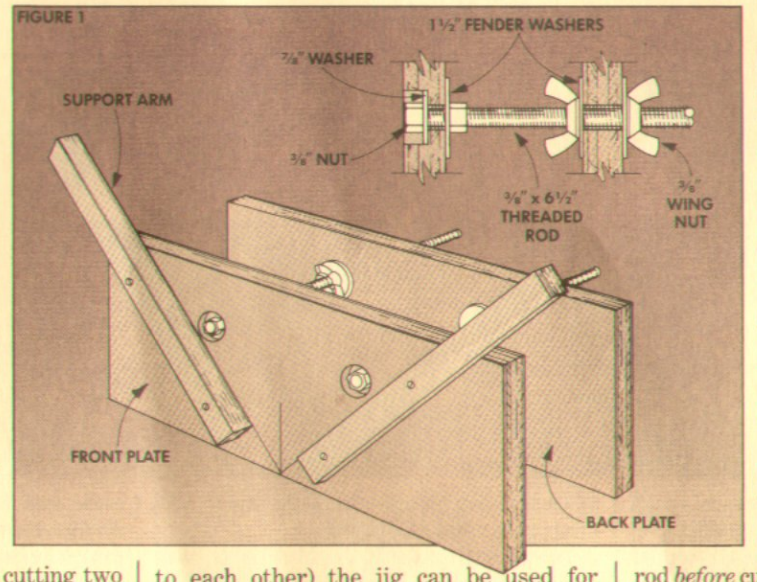

The adjustable jig shown here seems to solve the problem. To build the jig, begin by cutting two plates out of ¾" plywood to 6" wide by 16" long, see Fig. 2. Temporarily stick the two plates together with double-sided carpet tape or tack them together with finishing nails and retrim the bottom edges so they're *exactly* flush.

DRILL HOLES FOR RODS. With the two plates still stuck together, drill two 1"-dia. by 7/16"-deep counterbores in the front plate, see Fig. 2. And then drill ⅜"-dia. holes the rest of the way through both plates for threaded adjustment rods.

TENONS OR KEYS? The jig can be built for making tenons by adding one vertical support arm to the front plate. Or, by adding two support arms (at a right angle to each other) the jig can be used for cutting dovetail key joints.

SUPPORT ARMS. To locate the support arms, first determine a center bottom point on the front of the front plate. Then use a combination square to draw two 45° lines up from this point, see Fig. 3.

After the reference lines are drawn, cut two 1"-wide support arms to about 12" long. I cut these out of ¾" plywood so they would stay straight.

MOUNTING THE SUPPORT ARMS. Now clamp one of the support arms down so the top edge lines up flush with one of the angled reference lines. Locate one end of the arm so it's ½" up from the bottom edge of the plate, see Detail in Fig. 4.

After the first support arm is clamped in place, drill pilot holes and screw it in place. Then clamp the second support arm down to the other reference line, and check the location of this second arm with a framing square, see Fig. 4. It should be exactly 90° to the first arm. If it's not, loosen the clamps and readjust. Once it's in the correct location, clamp it down tight, and then drill and screw it in place. (Note: Don't glue it in case adjustment is needed.)

ASSEMBLY. Before assembly could begin, I cut two pieces of ⅜" threaded rod to 6½" long. (Shop Note: When cutting threaded rod put a nut on the rod *before* cutting. After it's cut, back off the nut to reform any damaged threads.)

To assemble the jig, use a double nut and washer arrangement on the front plate, see Detail in Fig. 1. (I used 1½"-dia. fender washers under the nut on the inside of the front plate and under the wing nuts on both sides of the back plate. These wider washers keep the plates square to the rods.)

Now straddle the two plates over the router table or table saw fence and slide them up tight against the sides of the fence, see Fig. 5. Then adjust the opposing wing nuts up against the back plate.

Finally, adjust the wing nuts so the jig slides smoothly over the fence, and check if the front plate is square with the table.

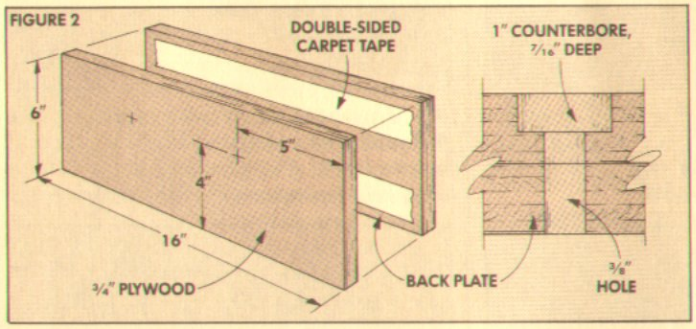

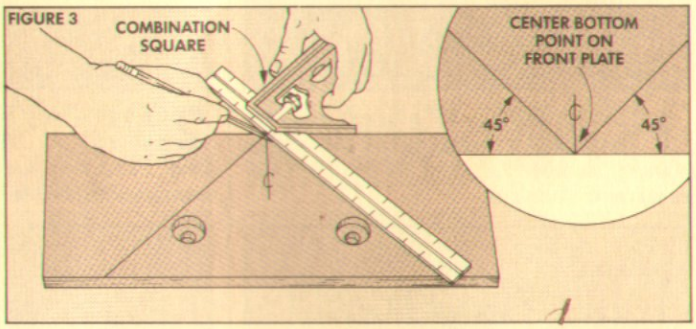

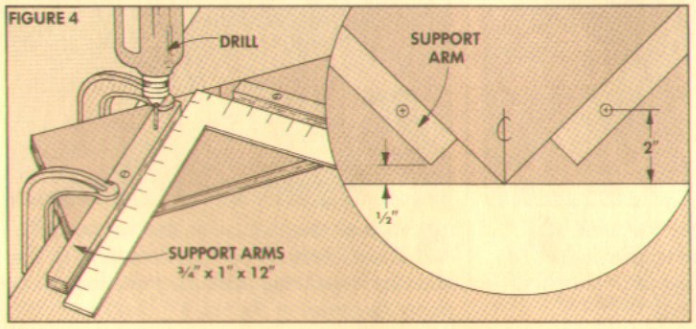

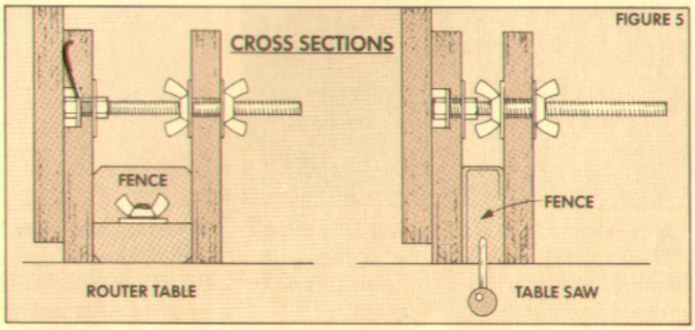

Miter & Dovetail Key Joint

A DOVETAIL THAT FOOLS YOU

At first glance, this may look like a neat little dovetail joint. But it's actually a miter joint with dovetail keys running across the miter.

These keys (sometimes called splines) strengthen the joint. They can be just small flat pieces of wood. But in this case we used dovetail-shaped keys across the corner to give the joint a whole new look.

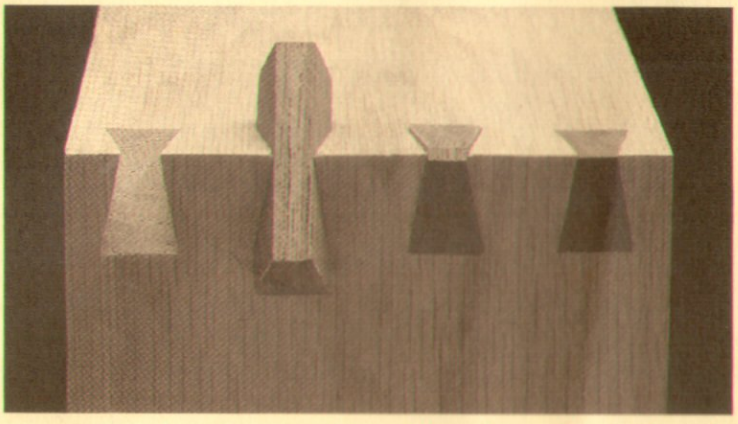

GETTING STARTED

To make the joint, start by cutting the sides for the box, drawer, or frame to final width but to *rough* length. Then cut any grooves, rabbets, or dadoes needed for the back, bottom, top, or drawer dividers.

SETTING UP THE SAW. Once the basic pieces are cut, I take a few minutes to get the table saw set up to cut the miters. First, I attach an auxiliary wooden fence to the miter gauge and make sure it's square to the blade. Then, to keep the workpiece from shifting along the fence, I stick a strip of sandpaper to the auxiliary fence with double-sided carpet tape.

TEST CUT. Next, tilt the blade to 45° and make a test cut on two pieces of scrap. Hold the two test pieces together and check them with a square.

THE MITERS

Once the saw is set up at exactly 45°, work can begin on the miters. Start by mitering one end of each box side, see Step 1.

Shop Note: I sneak up on miters by "double-cutting." It seems to give a cleaner, straighter cut that doesn't burn. Start by making an initial miter cut. Then make a second cut so only half the thickness of the blade (about 1/16") is cutting, see Detail, Step 1.

CUT THE OTHER END. After the first end of each piece is mitered, clamp a stop block to the auxiliary fence so that the other end will be cut about 1/16" longer than the final length, see Step 2. Cut the second end, and then move the stop block to double cut the piece to final length (skimming the last 1/16" off the miter).

BOTTOM. Once all the pieces are mitered to final length, cut the plywood bottom to fit in the rabbets or grooves, see Step 3. (Shop Note: If a frame is being made — without a bottom or top — I cut a piece of scrap plywood that fits inside the frame. This scrap helps keep the whole box square during assembly.)

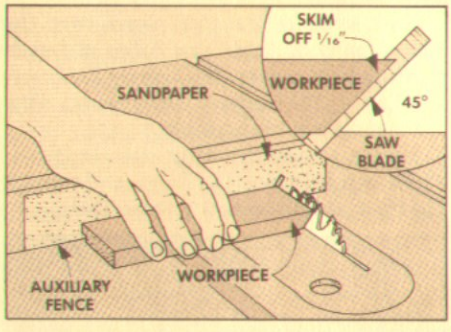

1 *First tip blade to 45° and cut one end. Then make a second cut on that end to skim off another 1/16" (half the blade's thickness) for a clean cut.*

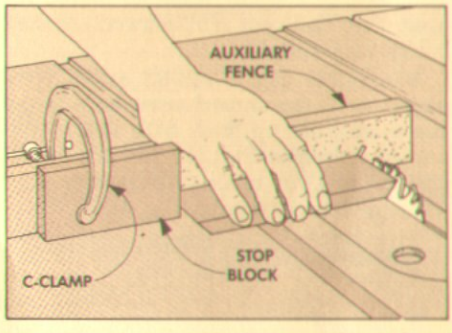

2 *Clamp a stop block to auxiliary fence and cut the other end slightly (1/16") long. Then readjust the stop block to trim workpiece to finished length.*

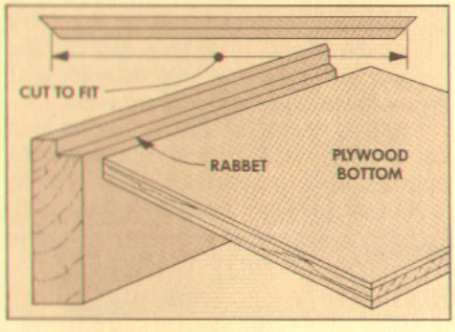

3 *Measure distance between ends of the rabbet on side pieces and cut plywood bottom to fit. Cut precisely since bottom helps keep box square during clamping.*

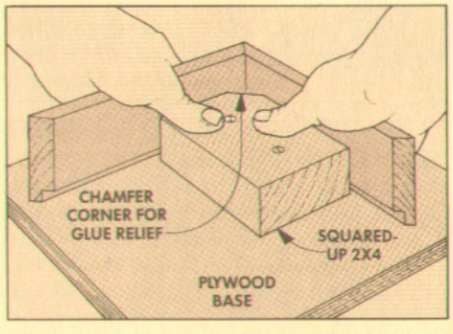

4 *Spread glue on miters and hold pair of side pieces tight against squaring jig. Chamfer corner of 2x4 jig to allow escape for glue squeeze-out on inside corner.*

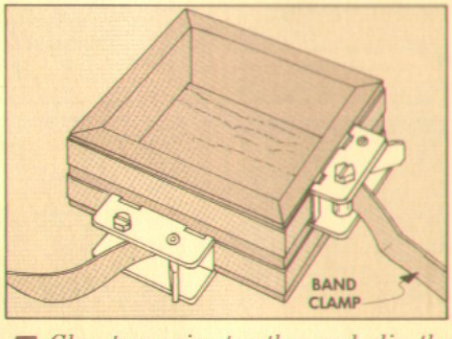

5 *Glue two pairs together and slip the bottom into place to square up the box. Clamp with two band clamps or wrap with a couple strong rubber bands.*

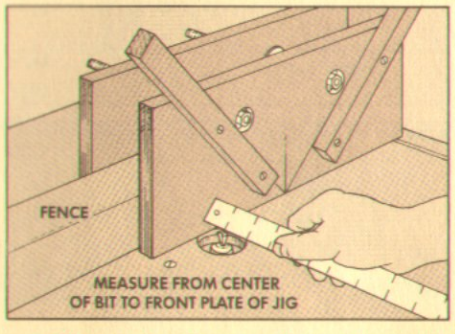

6 *Mount the jig over the router table fence. Determine the location of the slots by measuring from the front face of the jig to the center of the bit.*

ASSEMBLY. Before assembly, test the bottom for final fit by dry clamping the box together. Once it fits, go ahead and glue up the box.

On smaller boxes I find it easier to glue the sides up in pairs around a squaring jig, see Step 4. And then I glue the pairs together. On larger boxes, I find it's easier to glue up all four at once.

Either way, slip the bottom (or square scrap) in place to hold the box square. Then wrap a couple of band clamps around the whole assembly and tighten, see Step 5.

DOVETAIL SLOTS

After the glue is dry on the miters, the dovetail key slots can be cut across each corner. Begin by mounting a dovetail bit on the router table. (Note: We used a ¼" dovetail bit here, but you could use a ½" dovetail bit as shown in the photo or even a straight router bit for flat keys.)

JIG. To hold the box at an angle to the router table, I built a jig that straddles over the router table fence, see page 9. With the jig straddling the fence, determine the location of the slots by measuring from the center of the bit to the side of the jig, see Step 6.

If there's to be an odd number of keys, locate the first slot so it's centered on the width of the box, see Step 8. Now hold the box tight against the jig and push it through the bit, see Step 7.

ROUT OTHER SLOTS. Next, move the fence until the next slot location is centered over the bit and rout that slot. Then flip the box (don't move the fence) so the opposite edge is against the jig and rout the opposite slot. Continue with this procedure to rout all remaining slots.

THE DOVETAIL KEYS

Once the slots are cut, remove the jig but keep the router bit at the same height to make the dovetail keys. The keys are made by first routing dovetail tongues on the edges of a piece of scrap, see Step 9.

Hold the workpiece against the fence with a piece of scrap (see Step 9) and rout one edge. Then flip the workpiece so the opposite side is against the fence and rout the other edge, see Step 10. Now test the tongue for fit — it should be snug, see Step 11. If it's still too tight, readjust the fence to take off a little more (see tip on page 3).

After the tongues are routed, simply rip the keys off the strips, see Step 12.

FINISHING THE JOINT

Now cut the keys into 1½" lengths, apply a little glue to each key, and slide it into the slot. After the glue dries, trim off the excess with a fine-toothed saw, see Step 13.

To make the keys perfectly flush with the side of the box, shave them off with a sharp chisel, see Step 14. Then you can show off your "dovetail" joint.

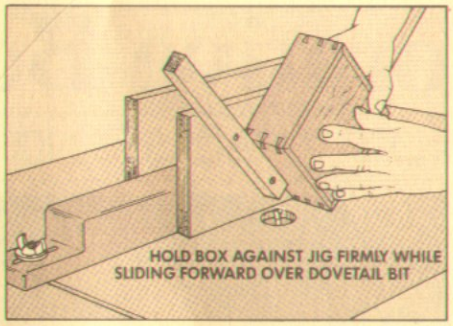

7 *Hold box tight against side of jig and down in the support arms and push through the bit. Corner of box should ride along surface of router table.*

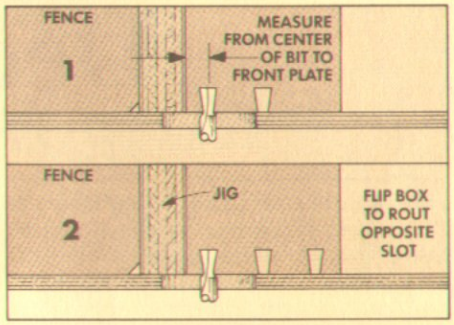

8 *Rout center slot first. Then move the fence for the next slot, Step 1. Without moving fence, flip the box around and rout the slot on the other side, Step 2.*

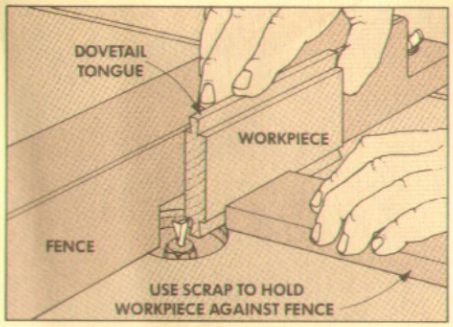

9 *With bit at same height, rout dovetail tongues on both edges of a piece of scrap. Use another piece of scrap to hold workpiece tight against the fence.*

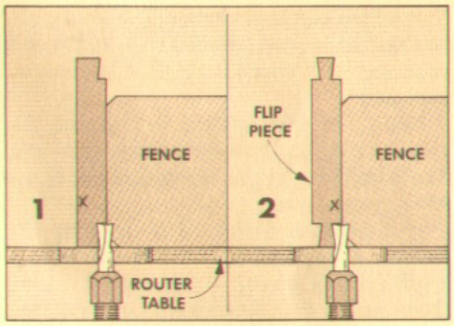

10 *Make first pass on both edges of one face of workpiece. Then flip piece over and rout opposite face. If tongue is too thick, move fence and rout again.*

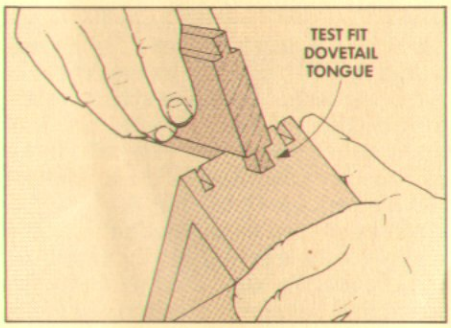

11 *Test the dovetail tongue to see if it fits in the slots routed in the box. If it's just a little too thick, slightly sand the tongues to produce a good snug fit.*

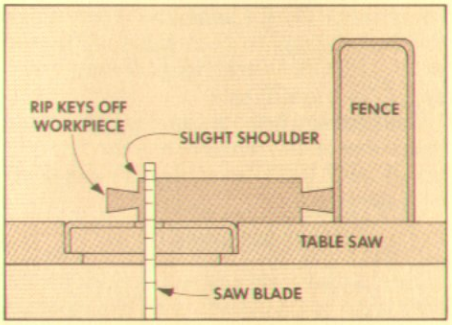

12 *Rip the long dovetail keys off the workpiece so they fall away from the blade. Leave a slight shoulder to be sure the keys are wide enough.*

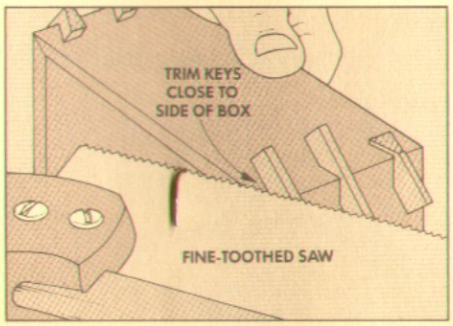

13 *Cut keys about 1½" long and glue them into the slots. Once the keys are dry, cut them off close to the side of the box with a fine-toothed saw.*

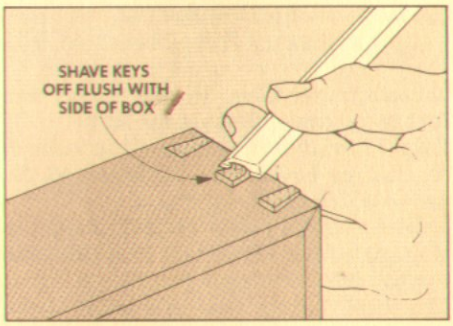

14 *Shave excess off flush with a sharp chisel. Work from each corner toward the center of the box side to prevent the dovetail keys from chipping out.*

Decorative Boxes

FOR KNICKS, KNACKS, AND KNUTS

I like to make little boxes — they let me be extravagant with exotic woods and veneers that I couldn't afford on larger projects. And, unless I'm trying to be tricky, boxes don't require complicated joinery — just careful fitting.

THE VENEERED PANELS

The square box shown in the photo has walnut sides and a lid panel made with Carpathian elm burl veneer. The hexagonal box has zebrawood sides and the lid panel is veneered with maple burl. (See Sources on page 24.)

Note: The rest of this article and the artwork deals with making the square box. The procedure for the hexagonal box is the same, except where noted.

THE PANELS. I started by making the veneered top panel (for the lid) and the felt-lined bottom panel. (You need to have these panels first in order to size the rabbets that are used to mount the panels in the side pieces, refer to Fig. 3.)

Start by cutting ¼" plywood panels to a rough size of 4½" square, see Fig. 1. (Note: ¼" birch plywood works well as a sub-base for veneer.) Then I laminated Carpathian elm burl veneer to both sides of the top panel. (For more on this veneering technique, see page 15.)

The plywood bottom panel is also cut to a rough size of 4½" square, but the felt isn't added until later (so it doesn't get filled with sawdust).

THE SIDES

After the panels are made, the stock for the sides is cut to size. Begin with two pieces of 4/4 stock (13/16" thick) at least 3" wide by 15" long. This length is longer than needed to allow extra for test pieces. Now, resaw these pieces to get two pieces ⅜" thick and plane the surfaces smooth, see Fig. 2. Then rip the two pieces to a final width of 2⅞".

ROUT RABBETS. The rabbets that hold the top and bottom panels in place can be cut on a router table. To rout the rabbets for the top panel, first set the bit to cut ⅛" deep. Then adjust the fence so the width of the rabbet equals the thickness of the veneered top panel, see Fig. 3.

When routing this rabbet, feed the workpiece from left to right (instead of the normal direction of right to left), see Fig. 4. This "back feeding" lessens chip-out on the shoulder that will be the top edge of the side piece.

Shop Note: When backfeeding, the router bit will try to pull the workpiece. Hold onto the workpiece tightly.

BOTTOM RABBET. To rout the bottom rabbet, adjust the fence so the rabbet is just a hair deeper than the combined thickness of the sub-base plywood and one thickness of posterboard. (The felt for the bottom panel is mounted to a piece of posterboard, see Detail, Fig. 3.)

OVERLAPPING RABBETS. The next step involves using a little ingenuity to get the lid to fit onto the base. The best way to get a good fit is to assemble the box as a whole unit, then cut the top off to form the lid. There's also a nifty technique that makes an overlapping rabbet joint where the lid and base meet, see Fig. 11.

To make these overlapping rabbets, two grooves are cut — one is cut on the inside of the side pieces *before* the box is assembled, and the second groove is cut on the *outside* of the box after it's assembled, refer to Fig. 3.

ROUT GROOVES. Begin by routing a ⅜"-wide groove, ⅝" down from the top edge of each workpiece, see Fig. 5. Note: The depth of the groove is important — it should be as close to half the thickness of the stock as possible.

CUT SIDES TO LENGTH. After the grooves are routed, the sides can be cut to length. Start by cutting the two workpieces into six pieces approximately 5" long. (Save two of the pieces to use as test pieces later.) Now set the saw blade to a 45°

FIGURE 1

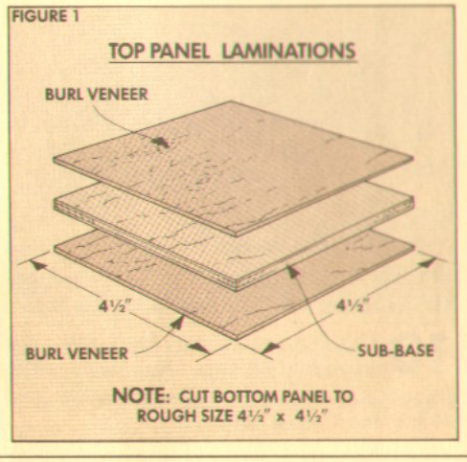

FIGURE 2

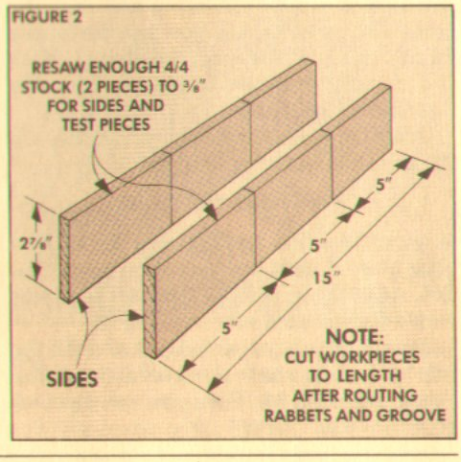

angle to cut cross miters on both ends of each piece. (On the hexagonal box set the blade to 30° and cut the workpieces into 3" lengths.)

We've found that the best way to cut miters like this is to use a double-cut procedure on each mitered end. See page 10 for details.

When mitering these pieces to final length, clamp a stop block to the auxiliary fence on the miter gauge so the point-to-point measurement on the sides is 4½" (2¾" on the hexagonal box), see Fig. 6.

CUT PANELS TO SIZE. After the sides have been cut to length, dry assemble the box with band clamps. Then cut the top and bottom panels to fit in the rabbets. Sneak up on these cuts until the panels fit snugly in the rabbets, but don't "spring" the mitered corners, see Fig. 7.

GLUE THE SIDES. When the top and bottom panels fit, the sides can be glued together. Use the panels to keep the sides square, but don't glue them in place yet. (I followed the gluing procedure shown in the article on page 10.)

SEPARATE BASE AND LID

Now comes the fun part — separating the base and lid. Before cutting into the box, I used a test piece to set the bit height and fence position on the router table.

POSITION THE FENCE. The fence is set to rout a groove on the outside of the box that overlaps the groove already cut on the inside of the box. The overlap should be about 1/16", which means setting the fence 15/16" from the bit, see Fig. 8.

Since these two grooves overlap, they will form the two overlapping rabbets on the lid and base, see Fig. 3.

ADJUST BIT HEIGHT. The critical part of this cut is adjusting the height of the bit so the groove on the outside of the box is slightly deeper than the groove already cut on the inside. (This sets the clearance between the two rabbets. If the groove is too deep the lid will be loose. If the groove is too shallow, the lid will be tight.)

Use one of the pieces left over after cutting the sides as a test piece. Set the depth of cut until the second groove is just a hair deeper than the first groove, see Detail in Fig. 8.

CUT GROOVES. When the set-up works on the test piece cut grooves on two *opposite* sides of the box, see Fig. 9. (To give you something to hold onto, press the top and bottom panels in place in the box.)

MAKE FILLER STRIPS. To keep the box from collapsing when the next two grooves are routed, cut two filler strips to fit in the grooves and tape them in place, see Fig. 10. With the strips in place, cut the two grooves on the remaining sides of the box.

Remove the strips, and the overlapping rabbets on the lid and base should slide together, see Fig. 11.

FIGURE 3

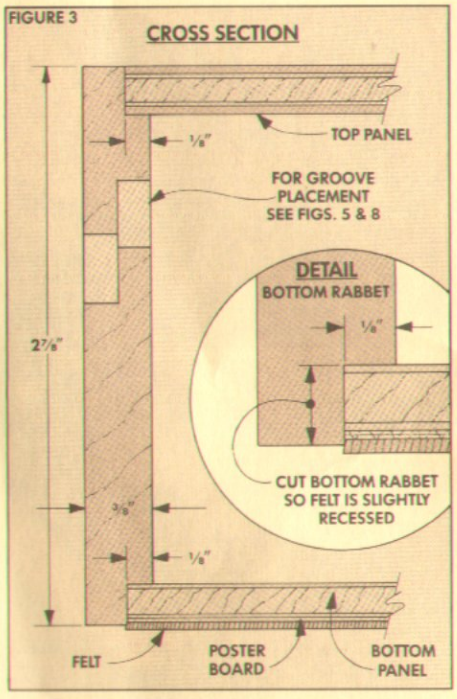

FIGURE 4

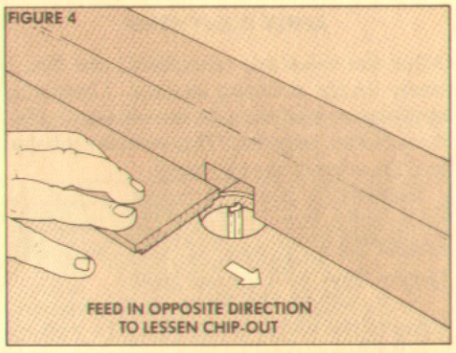

FIGURE 5

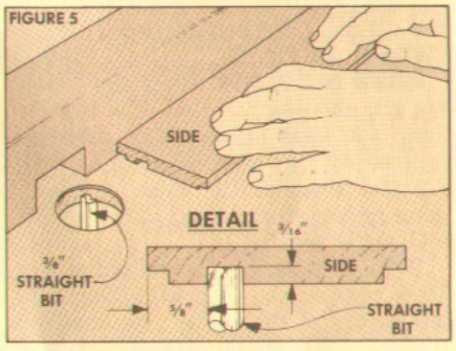

FIGURE 6

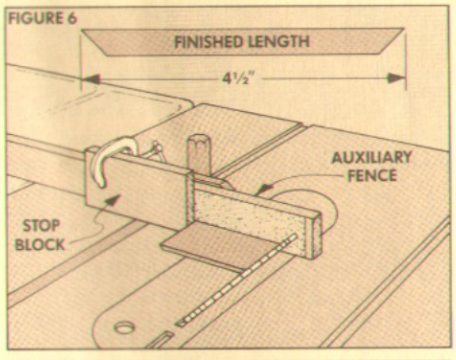

FIGURE 7

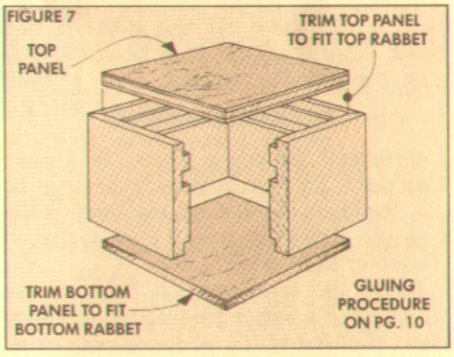

FIGURE 8

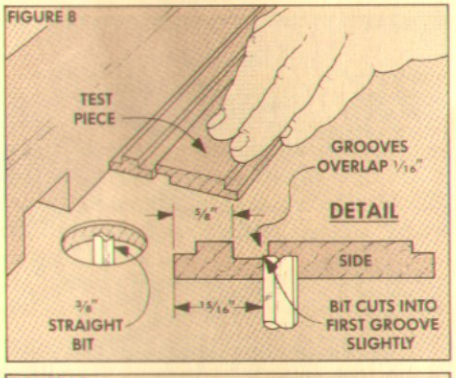

FIGURE 9

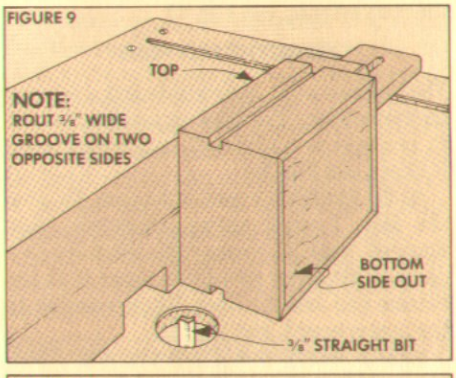

FIGURE 10

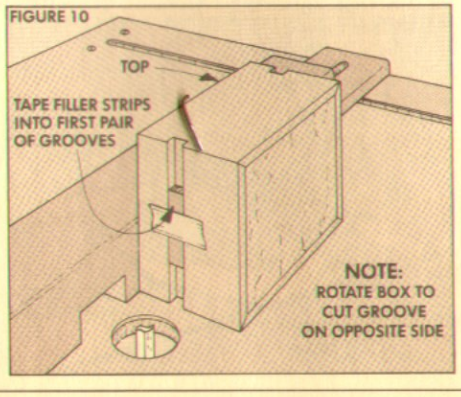

FIGURE 11

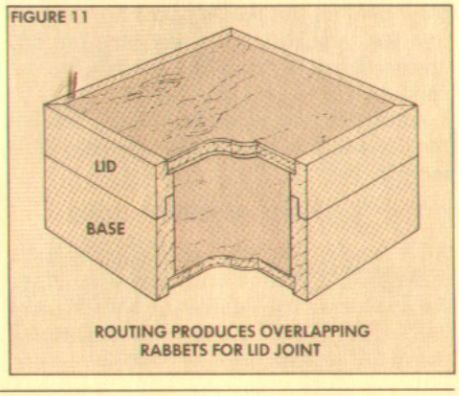

APPLY INLAY STRIP

After the sides are assembled, the box is ready for the finishing touches. I began by applying an inlay strip to the top panel. (See Shop Notes, page 23.) This strip is rabbeted into the edge of the top panel.

RABBET. To rout the rabbet, adjust the bit to cut a hair shallower than the thickness of the strip, see Fig. 13. (The strip is sanded flush with the top later.)

Next, adjust the fence to cut a rabbet equal to the width of the strip. To prevent this thin piece from sliding into the opening in the fence, I clamped a plywood facing to the fence, see Fig. 12.

MITER THE STRIPS. After the rabbets are cut, glue the panel into the box's lid. Then the ends of the inlay strips are mitered with a sharp chisel to fit in the rabbets. To guide the chisel, I made a mitering block from a scrap of 2x4 cut off at a 45° angle, see Fig. 14.

Begin by mitering one end of the strip. Then, position the strip with the point in one corner of the rabbet and mark the position of the opposite point with a chisel, see Fig. 15. Now cut this miter on the block. After the strips have been mitered, glue them into the rabbets.

CHAMFER LID EDGES

I chamfered the edges where the lid and base meet. This can be done by holding the box together and against the fence while making a single pass over a V-groove bit on the router table, see Fig. 16.

Note: The top edges on this box are square. For a softer profile, the top edge could be eased with a ¼" round-over bit on the router table, see Fig. 17.

MAKE THE FELT PADS

The box has a felt liner inside and a felt pad on the bottom. The trick to making the felt fit properly is applying it to a posterboard backing, see Fig. 18.

GLUE FELT TO POSTERBOARD. To glue the felt, I used spray adhesive. (See Sources, page 24.) Spray the adhesive on a piece of felt large enough to make both the bottom pad and the liner. Then mount it to the posterboard, see Fig. 18.

TRACE PATTERNS. Now trace the bottom panel on the posterboard for the bottom pad, see Fig. 18. Then turn the box upside down to trace the outline for the liner, see Cross Section, Fig. 18.

After the patterns are traced, cut out the pad and the liner with an X-Acto knife see Fig. 19.

FINAL ASSEMBLY

After sanding the box, I applied three coats of Deft Clear Wood Finish (aerosol). When the finish was dry, I glued the bottom panel into the box. Then I glued the felt insert and pad to the bottom panel, see Fig. 20.

FIGURE 12

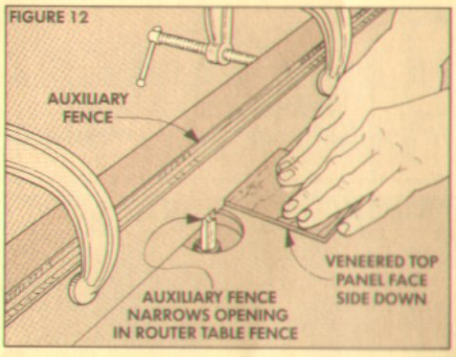

FIGURE 13

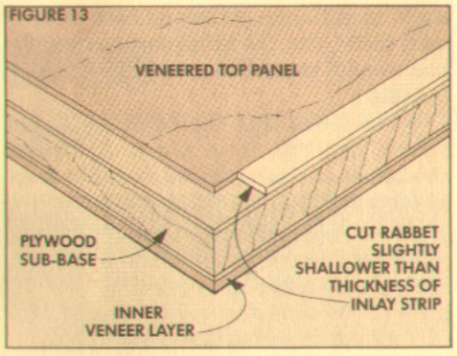

FIGURE 14

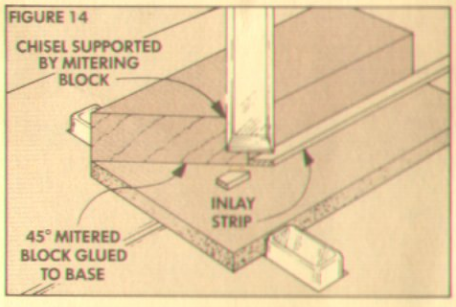

FIGURE 15

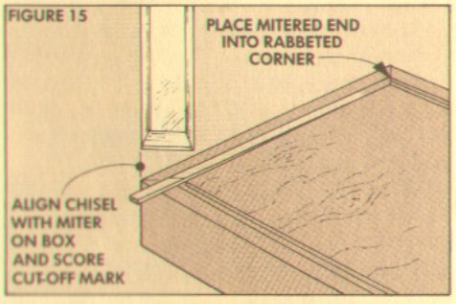

FIGURE 16

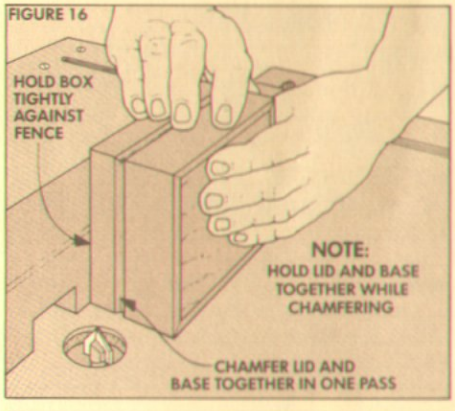

FIGURE 17

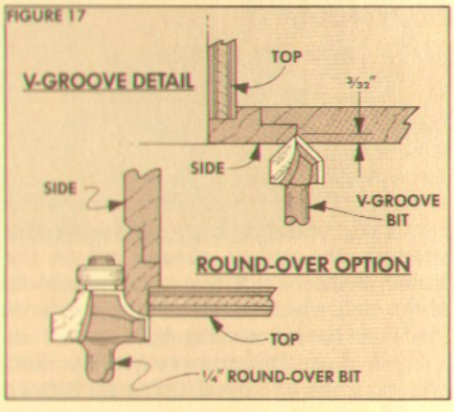

FIGURE 18

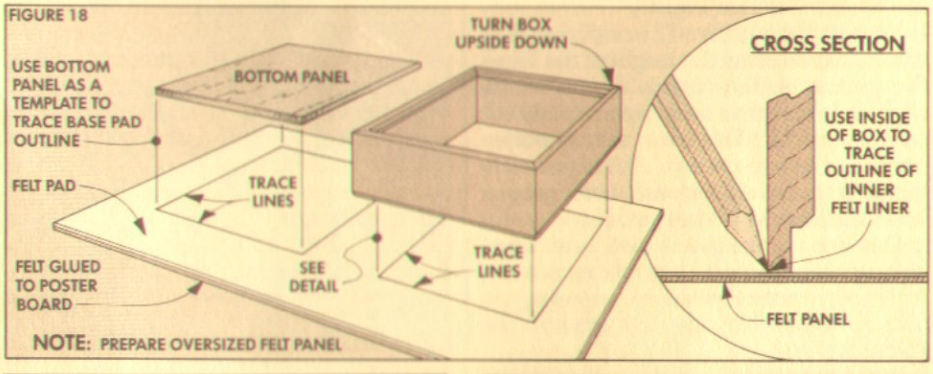

FIGURE 19

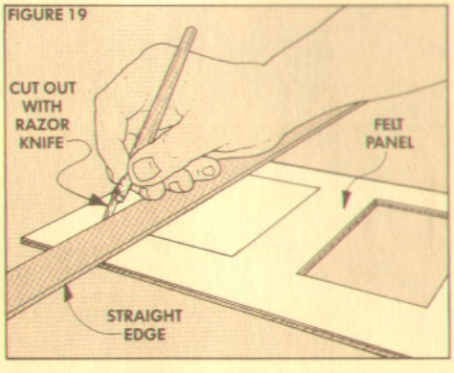

FIGURE 20

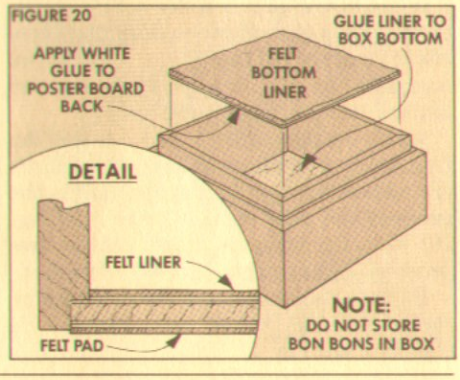

Veneers

DE CURL DE BURL

I worked with two different kinds of veneers when making the projects for this issue. The briefcase is covered with paper-backed flexible veneer. The tops of the little decorative boxes are covered with old-fashioned veneer. (It's stiff, wrinkled, and as dry as an autumn leaf.) Gluing these two types of veneers to a sub-base is similar, but the preparation is different.

Flexible veneer requires no preparation before gluing. It's as easy to apply as plastic laminate. That's because the thin layer of veneer is laminated to a sheet of tough paper. The paper keeps the veneer flat and prevents splitting.

Old-fashioned veneer requires special preparation. This is because it's rarely flat. To compound the problem, figured veneers such as burls don't have any real grain structure — it goes every which way. I call this "nervous" grain. It's under stress and tends to crack under pressure. To lessen the chances of cracking, it should be flattened before use.

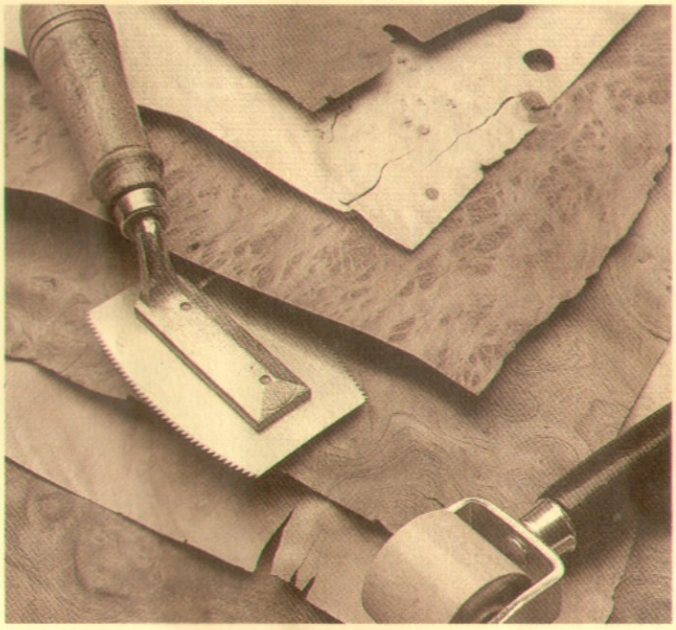

FLATTENING

The secret to flattening veneer is dampening it to make it flexible, then pressing it flat. The process takes about three days in a simple flattening press.

DAMPENING. Dampen the veneer with water sprayed from a hand mister. Don't soak it. Just lightly spray each side without forming droplets. With just a little moisture it's ready to go into the flattening press.

FLATTENING PRESS. The flattening press isn't fancy. It's just two pieces of ¾" particle board or plywood, six or eight bricks, and some absorbent paper (like brown paper grocery bags).

To flatten the dampened veneer, place it between the sheets of paper and the pieces of particle board, see Fig. 1. Then place the bricks on top and let it sit 24 hours.

On the second day, remoisten the veneer, put in dry paper, then replace the bricks.

On the third day, change the paper, but *don't* moisten the veneer. By this time the veneer will be almost flat, but it should be allowed to dry thoroughly before use.

GLUING

Gluing small pieces of veneer to a sub-base can be done with contact cement or yellow glue. I prefer a plywood (birch or Baltic birch) sub-base because the glue sticks to it well. If Masonite is used, it should be roughened with sandpaper to help the glue form a stronger bond.

CONTACT CEMENT. Contact cement is the easiest way to glue veneer to another surface. The secret to a good bond is making sure there's enough cement on both surfaces.

Since figured veneer is predominantly end grain, it's very absorbent. The open wood pores will soak up the first coat of contact cement. Let this first coat dry thoroughly, then apply a second coat.

When the second coat dries, the surface should look glossy. If any dull spots remain, apply another coat.

Contact cement has to be "dry" on both surfaces being joined before it can be used. When the contact cement no longer feels sticky, the veneer can be applied.

To apply the veneer, lay a piece of paper on the top of the sub-base. Then, position the veneer. Now move the paper to expose a ½" strip along one edge where the two surfaces can come together.

When the two surfaces are joined along one edge, slowly slip the paper from between the surfaces while pressing them together. Then roll the veneer flat with a roller, see Fig. 2.

YELLOW GLUE. Yellow wood glue is safer to use than contact cement — especially in areas with poor ventilation. To glue veneer with yellow glue, a small press is needed. For the small veneered panel on the decorative box, I made a press with scraps of particle board and C-clamps.

To use the press, apply glue to both sides of the sub-base and to the veneer. Then sandwich the sub-base between two pieces of waxed paper to keep the glue from sticking to the press and clamp it tight.

Since no air can get to the glue, it dries slowly. Allow at least 24 hours before removing the clamps.

FIGURE 1

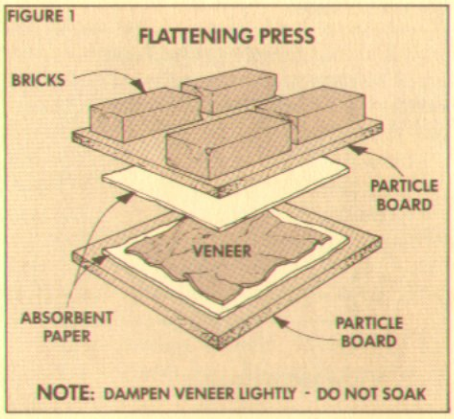

FIGURE 2

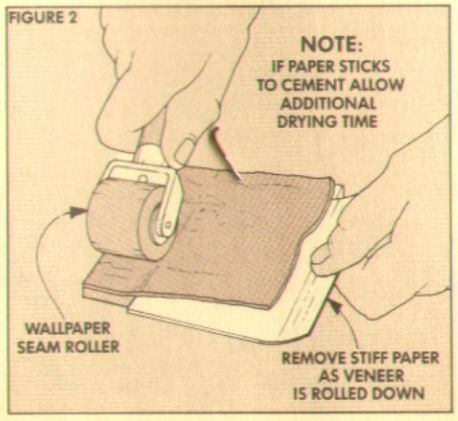

FIGURE 3

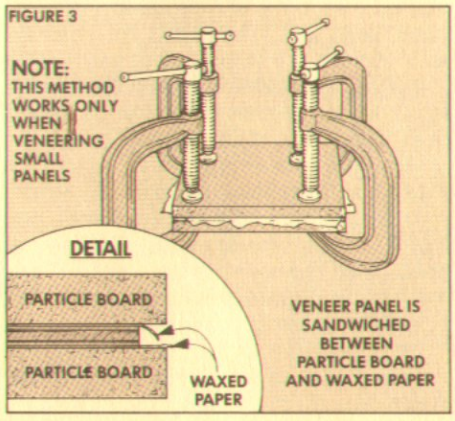

Briefcase

A CASE FOR THE YUPPIES

For years I've wanted to build a wooden briefcase, but one thing stood in the way: a source for the hardware. This problem has been solved by the folks who put out The Woodworkers' Store catalog — they now have a kit of the hardware (locks, hinges, and a liner) as well as a leather handle for briefcases, see Sources, page 24.

Note: All of the dimensions of this briefcase are based on fitting it with the liner from The Woodworkers' Store catalog. This means a case that measures 11⅞" by 15⅞" *inside*. (The liner is okay in quality, but it's not a nice leather one. You could leave it out, and build the case any size you want.)

To make the case as lightweight as possible, I made the frame out of ½"-thick stock and the panels out of ¼" hardwood plywood. (Using hardwood plywood provides a lightweight panel that's also sturdy and stable.)

There's also another option for the panels. If you want to get a little fancier, the panels can be covered with veneer — which isn't as difficult as it might sound. The new flexible veneers are so easy to work with it almost takes all the fun out of it. These veneers come in sheets with a paper backing and can be applied to a sub-base (birch plywood works well) with contact cement.

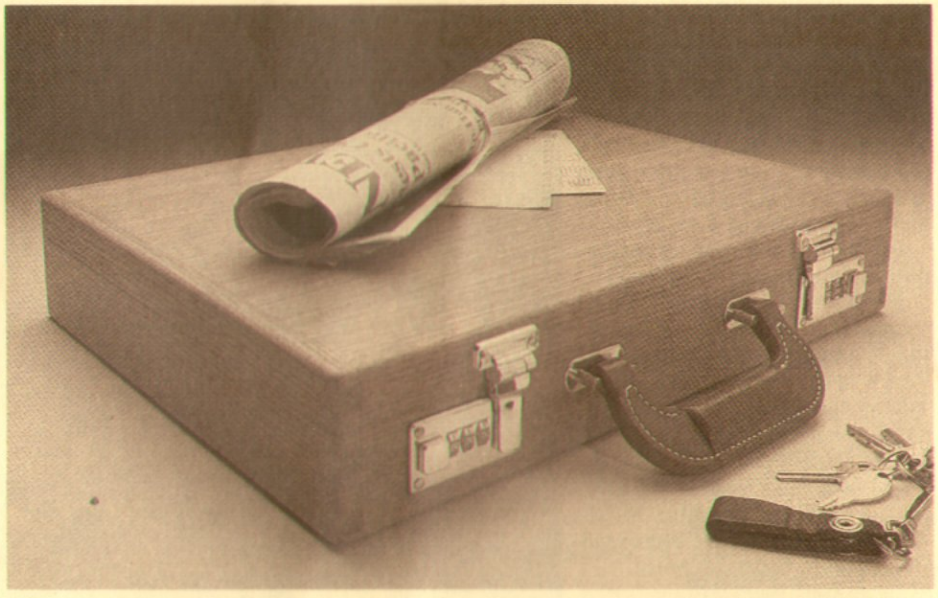

VENEERED PANELS

If you want to use ¼" hardwood plywood (without veneer) for the panels, begin by cutting them to a size of 12¼" wide by 16¼" long. If you want to apply a flexible veneer to the panels, begin by cutting the ¼" plywood sub-bases about 18" wide by 14" long, see Fig. 1. (These oversized sub-base panels are trimmed to fit after the veneer is applied.)

Note: The sub-base panels for the veneer are cut so the grain runs in the 14" direction, see Fig. 1. This is because veneer is always applied cross-grain (perpendicular) to the sub-base grain.

After the sub-bases are cut to rough size, also cut four pieces of flexible veneer to the same rough size. (The panels are veneered on both sides.)

CONTACT CEMENT. To mount the veneer, apply contact cement to the sub-bases and to the paper side of the veneer.

When the cement is dry to the touch, the veneer can be applied. Support the veneer over the sub-base with several dowels, see Fig. 1. Remove the dowel on one edge and press down the veneer with a roller. Then continue to remove dowels and press the veneer down across the sub-base.

TRIM TO SIZE. After the panels are veneered on both sides, trim them to final dimensions of 12¼" wide by 16¼" long.

THE CASE FRAME

Next, work can begin on the case. Rather than making a lid and a base as two separate pieces, the technique here is to make the case as one unit and then cut the lid off.

So, to make the case, cut the four sides to size. All four pieces are ½" thick and ripped to a final width of 3⅜". The long sides (A, the top and bottom pieces) are cut to a rough length of 18" and the short sides (B) are cut to a rough length of 14", see Fig. 2.

GROOVES FOR PANELS. Next, grooves are cut on the inside face of each piece to hold the panels. The tricky part is getting the grooves in exactly the right position.

The distance from the edge of the workpiece to the farthest edge of the groove must be equal to the thickness of the veneered panel, refer to Fig. 4. (If the groove is cut too close to the edge, the panel will stick up. And since the veneer is so thin, it can't be sanded down.)

Set the fence on the table saw so the distance to the outside of the blade is equal to the thickness of the veneered panel. Then cut a groove on both edges of all four pieces, see Fig. 2. (These grooves are just single kerfs — equal to the width of the saw blade.)

RABBET PANEL. After the grooves are cut, the panels are rabbeted to form tongues to fit in the grooves. I did this on the router table, see Fig. 3.

Set the fence so the width of the rabbet is equal to the depth of the groove (3/16"). Then raise the height of the bit so the thickness of the remaining tongue fits in the groove. (It helps to sneak up on this cut, testing it on a piece of the scrap cut off from the veneered panel. Raise the bit a little at a time to get a good fit.)

Note: When the rabbets are cut on the panels, make sure the face you want to show on the outside of the case is *down* on the router table.

FIGURE 1

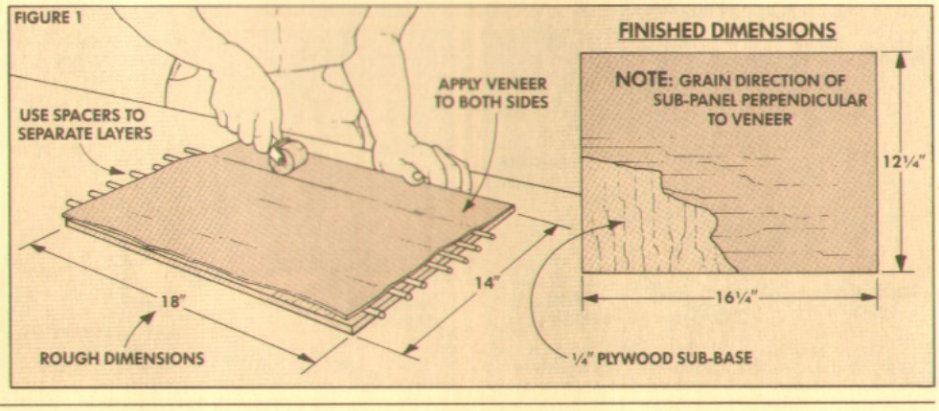

JOINING THE CASE

After the panels are rabbeted, the four sides of the case can be joined. Here I used miter joints that are strengthened and decorated with dovetail keys. (See the article starting on page 10.)

To join the case with this joint, begin by mitering one end of all four frame pieces. Then in order to miter the opposite ends to final length, slide the panel into the grooves in one long side and one short side, see Fig. 5. Now mark the points where the rabbeted shoulder of the panel ends on the frame pieces, see Fig. 6. Then miter the ends of the pieces at these marks.

Shop Note: When mitering these ends, attach a fence to the miter gauge and clamp on a stop block. Adjust the stop so the cut is made right on the mark on the long piece. Then miter *both* long pieces at the same setting. Move the stop block and miter the short pieces to length.

ASSEMBLY. After all four pieces are mitered to length, the case can be assembled. Apply glue to both mitered ends and the grooves for the panels. Then slide the panels in place and clamp the case together with band clamps.

DOVETAIL KEY JOINTS

When the glue is dry, the dovetail slots can be cut on the corners of the case. I cut three slots with a ½" dovetail bit using the layout shown in Figure 7. (Note: ¼" or ⅜" dovetail bits can also be used, but use the same spacing to the *center* of the bit as shown in Fig. 7.)

DOVETAIL SLOTS. To cut the slots, use the jig shown on page 9 to hold the case on the router table. Set the height of the dovetail bit to ⅜" and position the jig ½" from the center of the bit, see Fig. 8. (Note: By setting the bit ⅜" high, it will produce slots ½" deep as measured on the side of the case, see Fig. 7.)

Now rout dovetail slots on all four corners of the case. Then turn the case around (so the other side is against the jig), and rout four more slots.

The middle slot is routed off-center toward the bottom of the case. This is because when the box is cut apart to form the lid, there will be an ⅛" kerf removed. To allow for this kerf, the middle slot is shifted ⅛" toward the bottom of the case — which means it's centered 1⅝" from the bottom, see Fig. 7. This way, after the kerf is cut, the dovetail keys will be evenly spaced.

DOVETAIL KEYS. After all three slots are routed on each corner, dovetail keys are cut to fit in the slots. (See the article on page 10.) Glue the dovetail keys in the slots, trim them off, and sand them flush with the sides of the case.

ROUND EDGES. Finally, round-over the mitered corners and all edges with a ¼" round-over bit, see Fig. 9.

FIGURE 2

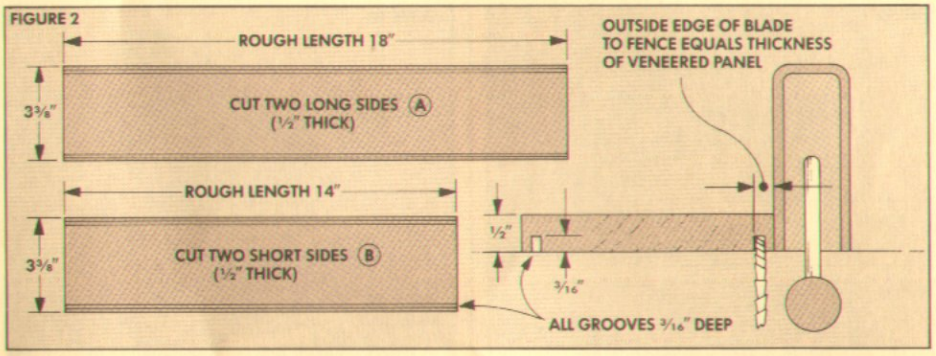

FIGURE 3

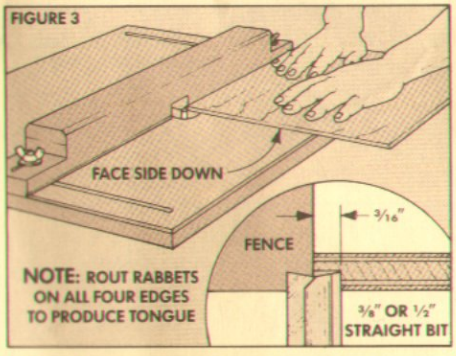

FIGURE 4

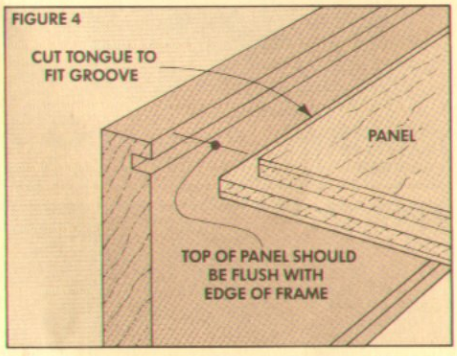

FIGURE 5

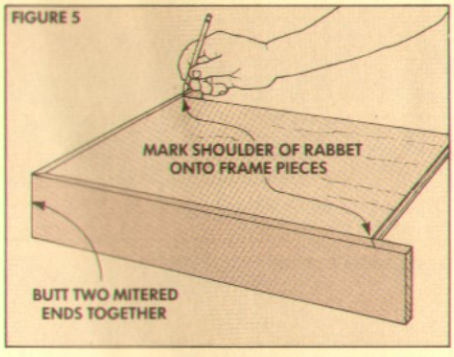

FIGURE 6

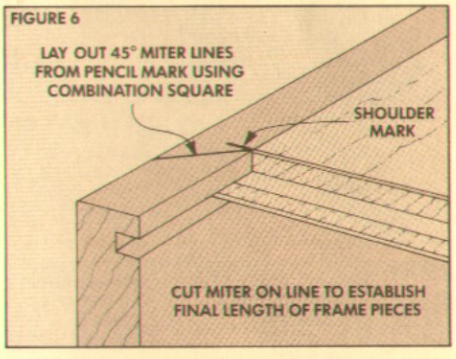

FIGURE 7

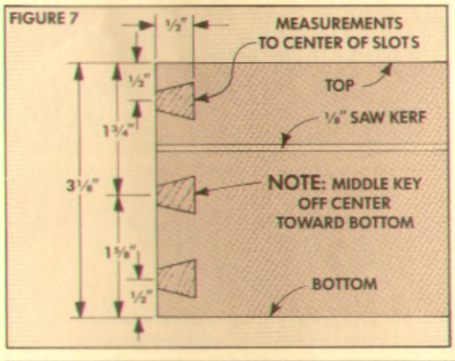

FIGURE 8

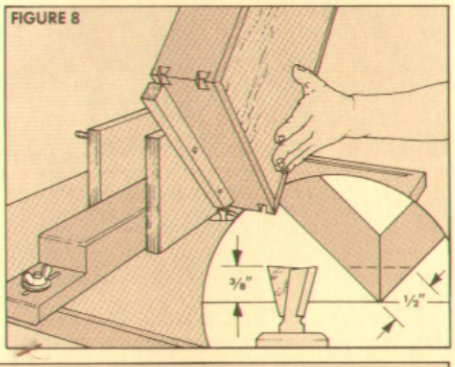

FIGURE 9

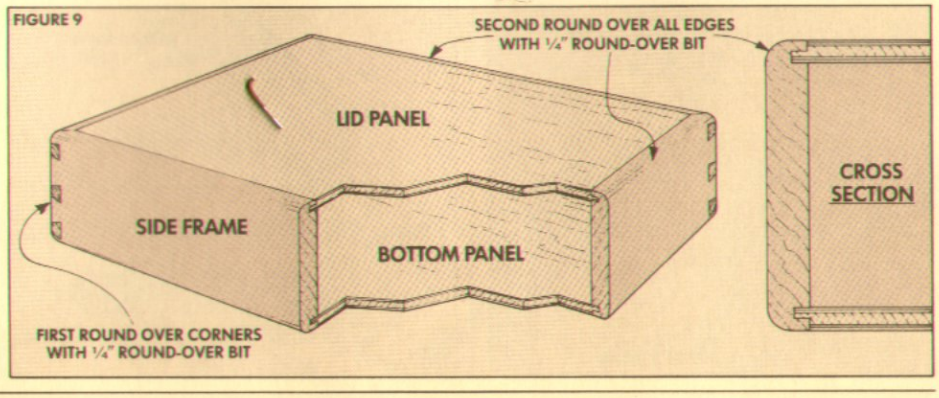

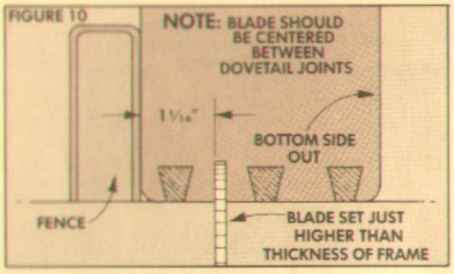

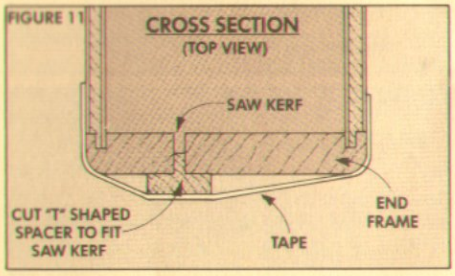

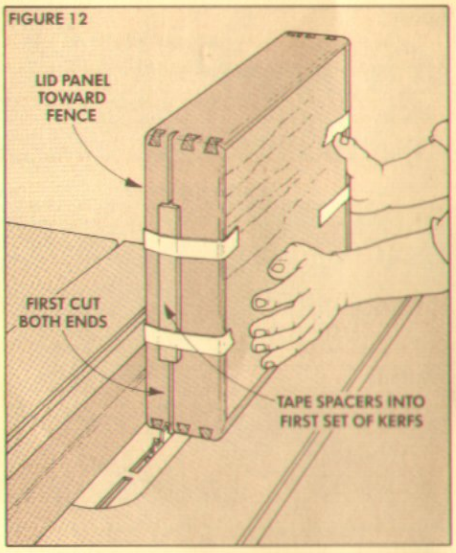

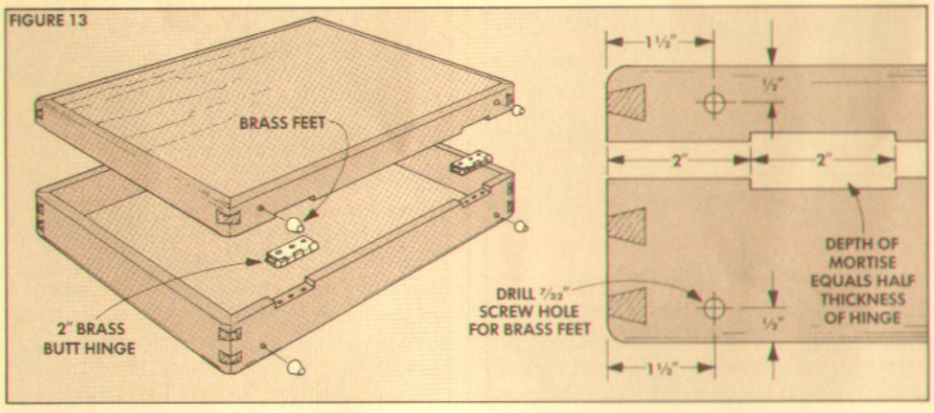

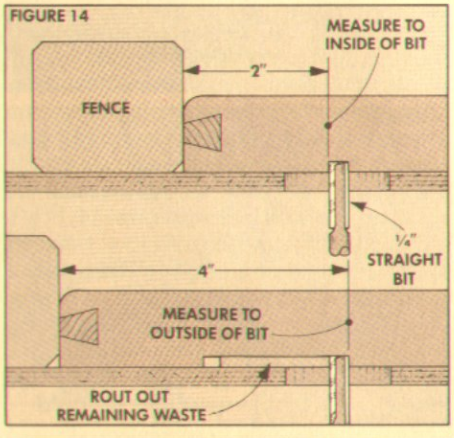

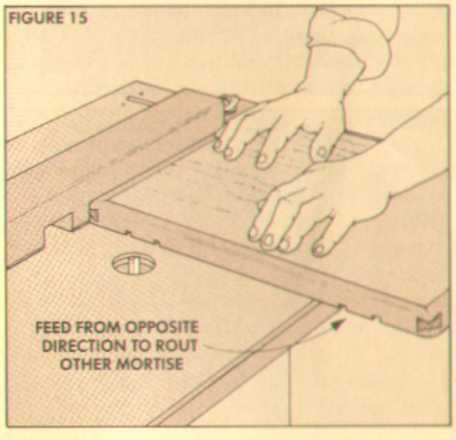

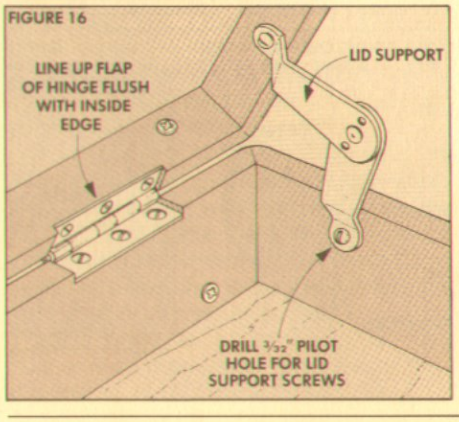

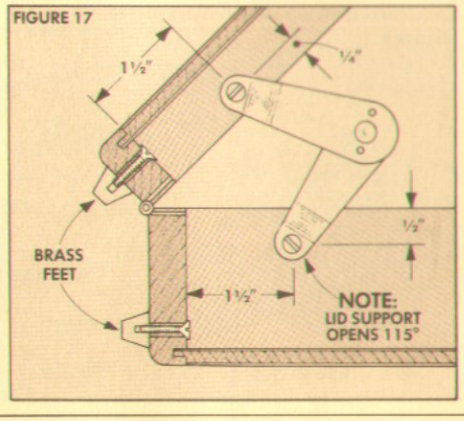

CUT OFF LID

Now the cuts can be made to separate the lid from the base. But before making these cuts, first make two T-shaped spacers, see Fig. 11. (These spacers are used to prevent the lid from collapsing on the base as the final cuts are made.)

To make the spacers, cut rabbets on two edges of a piece of scrap (about 12" long by 2" wide). Adjust the size of these rabbets to leave a tongue equal to the width of the kerf made by the saw blade. Then trim off the edge of this piece and cut it in half to produce two T-shaped spacers.

CUT OFF LID. Now set up the saw by raising the blade high enough to cut through the thickness of one side of the case, see Fig. 10. Then adjust the fence so the cut is made 1 1/16" from the fence.

To cut off the lid, make a cut on one end of the case. Then rotate the case 180° and make another cut on the opposite end.

Now tape the T-shaped spacers in these two cuts and make the final two cuts on the remaining sides, see Fig. 12.

MOUNT THE HINGES

Now the lid and base are ready for all the hardware. First, mount hinges to join the lid and base. There are two 2" brass hinges mortised into the edges of the lid and base, see Fig. 13. I cut the mortises for the hinges on the router table.

HINGE MORTISES. Mount a 1/4" straight bit and set it to a height equal to half the thickness of the knuckle of the hinge. Then set the fence 2" from the *inside* of the bit (see Fig. 14), and make a cut at both ends of the lid and the base, see Fig. 15.

Reset the fence so it's 4" from the *outside* of the bit (to make a 2"-wide mortise), see Fig. 14. Then make another set of cuts and clean out the waste between the cuts.

MOUNT HINGES. Mounting these hinges is a little tricky. I had some trouble getting the hinges lined up so the lid was perfectly aligned with the base (when it was closed.)

One way to do it is to mount the center screw in the leaf that attaches to the base. Then mount "locator pins" in the outside two holes of the other leaf (that mounts to the lid). (Locator pins are described in *Woodsmith* No. 42, page 8.)

With the locator pins mounted, hold the lid in position over the base and press down so the pins mark the location of the screws in the hinge mortise in the lid. Then mount these screws. This should help align the lid and base. And continue by mounting the rest of the screws.

If the lid is off a little from aligning with the base, fiddle with the hinges to get the alignment as close as possible. Then clamp the case closed and plane the sides so the lid and base align.

BRASS FEET. After the hinges are mounted, drill four holes for the screws

used to mount the brass feet, see Fig. 13.

LID SUPPORT. Next, the lid supports are mounted inside the case. Drill pilot holes for the supports as shown in Fig. 17. Then screw the lid supports in place.

LOCK AND HANDLE

The hardware kit also contains two combination locks that are mortised into the base. (While mortising in the locks, I removed the hinges, feet and supports from the other end of the case.)

MORTISE. The mortises for the locks are ¾" wide by 2" long and are located ½" from the top edge of the base, see Fig. 18. To cut the mortises, mark their locations and drill out the waste with a ¾" Forstner bit, see Fig. 19. (Since the mortises go all the way through the sides, clamp on a backing piece to prevent chip-out.) Then use a chisel to pare the sides of the mortise square, see Fig. 20.

Now, slide the lock into the mortise and mark the location of the four holes in the corners. Then drill ⅛" holes through the case sides for the brass posts, see Fig. 21. (These brass posts are pins that are split at the end and work something like cotter pins.)

MOUNT CATCH. Before mounting the lock, the catch must be positioned. Remount the hinges and place the lock in the mortise (with the posts in place, but not spread) and close the lid.

Then insert the catch into the lock, and mark the location of the two brass posts that hold the catch to the lid, see Fig. 22. Remove the catch and drill ⅛" holes for the brass posts.

HANDLE. There's one more set of holes to drill for the handle. Locate the brass swivel plates on the handle so they're centered on the width and height of the case (with the lid closed), see Cross Section in Fig. 24. Then drill pilot holes for the screws used to mount the handle.

FINISH THE CASE. Before the final mounting of all this hardware, sand the case and apply the finish. (I used Sutherland Welles Polymerized Tung Oil, see Sources, page 24.) Let the finish dry thoroughly before mounting the liner.

INSTALL HARDWARE. When the finish is dry, remount the hinges, the brass feet, the lid support, and the handle to the case. Then secure the locks and catches with the brass posts.

To do this, insert the posts and use a screwdriver to spread the split ends. Then use a C-clamp to tighten the ends down, see Fig. 23. (Fold up a piece of paper towel and place it on the head of the post so it doesn't get scratched by the C-clamp.)

INSTALL LINER. The last step is to install the liner. Fasten the liner's panels inside the case with double-sided carpet tape, see Fig. 24. Then tack the end flaps to the sides of the case with small brass brads.

FIGURE 18

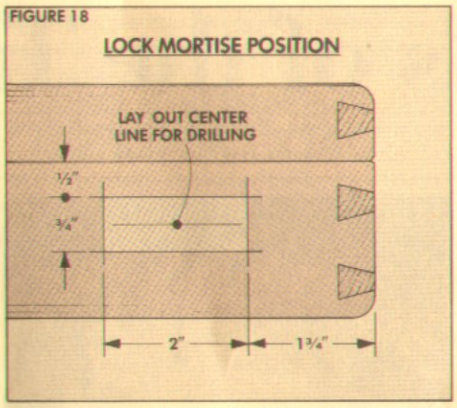

FIGURE 19

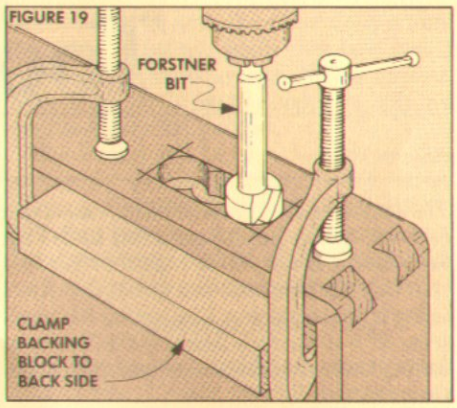

FIGURE 20

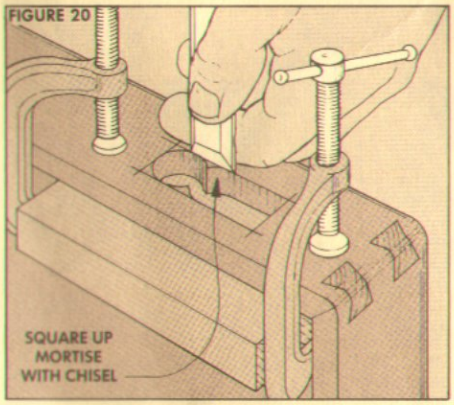

FIGURE 21

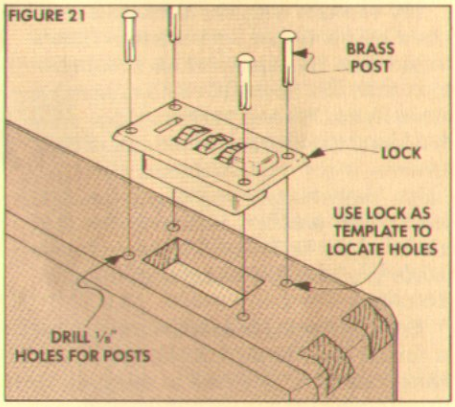

FIGURE 22

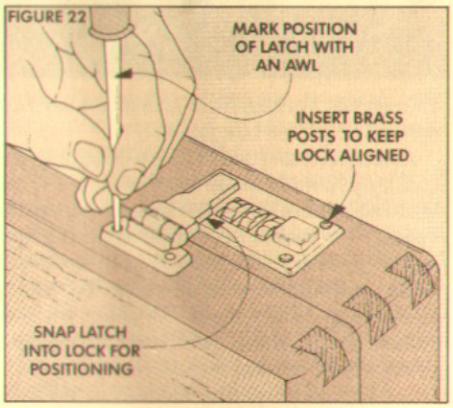

FIGURE 23

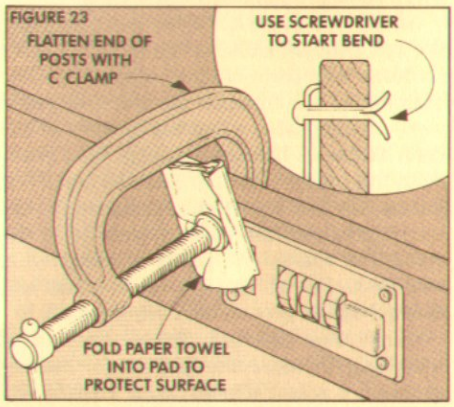

FIGURE 24

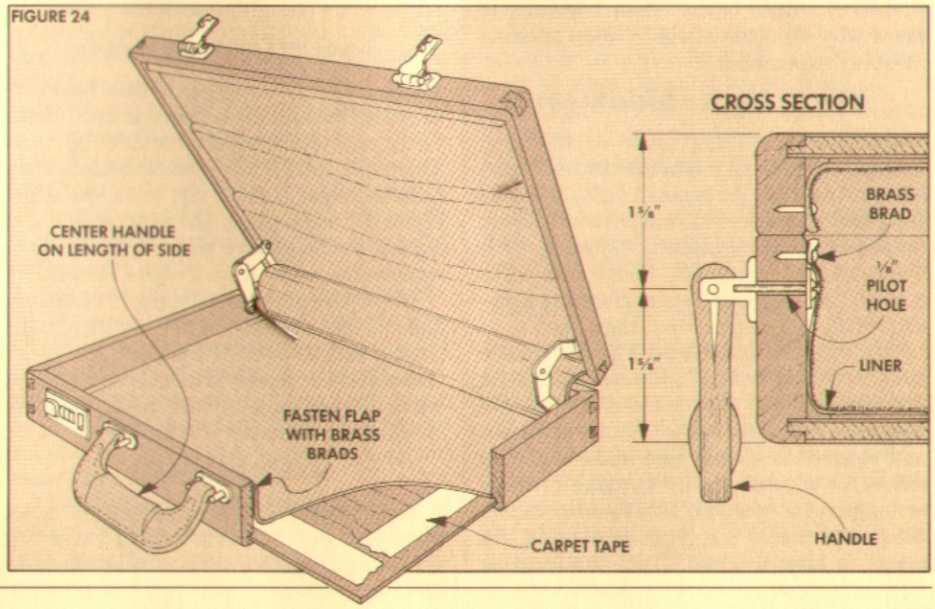

Tools of the Trade

DADO BLADES

I'm not a skeptical person. Since I assume a tool will do the job it's intended to do, I'm surprised when it doesn't. Before blaming the tool I ask myself two questions: Am I using it properly? Am I expecting too much from it? For the past four months I've been asking these questions over and over about dado blades.

My concern with the performance of dado blades began with a letter from a subscriber. He expressed his dissatisfaction with the Sears 16-tooth adjustable dado blade. He had purchased the dado blade and found that the bottoms of the grooves it cut weren't square with the sides. Sears happily exchanged the dado blade with another, assuming the first blade might be faulty. The second dado blade produced the same angled groove bottoms.

Before jumping to conclusions, we bought a similar dado blade from Sears. It had the same problem, so I had to conclude there was a basic problem with these blades.

About this same time we were building the box joint projects for Issue 42. Another problem with dado blades cropped up. The bottoms of the notches for the box joints were unacceptable when cut by most of the dado blades we have in the shop. We switched to the router table to make the small box joints. But this wasn't an alternative for the larger joints on the cabinet because of the amount of waste that had to be removed in one pass. So we used a dado blade and cleaned up the groove bottoms by hand.

That was the last straw. Instead of searching for more alternatives for making grooves, I asked myself what I really expected of a dado blade. Then I wanted to know why the dado blade so often failed to meet my expectations.

HOW TO JUDGE A DADO BLADE

Judging a new dado blade seems easy enough. Just take it out of the box and make a few cuts across the grain (a dado) and with the grain (a groove) in a scrap of wood. Then, maybe try it on a piece of plywood. If it splinters, it's no good. If the cut looks smooth, the dado blade is performing properly. Well, there's more to it than that.

THE DADO BLADE'S JOB. The dado blade should cut a wide kerf with clean edges, a flat bottom, and the corners where the bottom meets the sides should be sharp and square. It should also make a partial cut on the edge of a board to make a rabbet or tongue. It should be able to make multiple passes across the grain on the end of a board to form a tenon. And, it should be able to cut through the end of a board to make a notch for box joints.

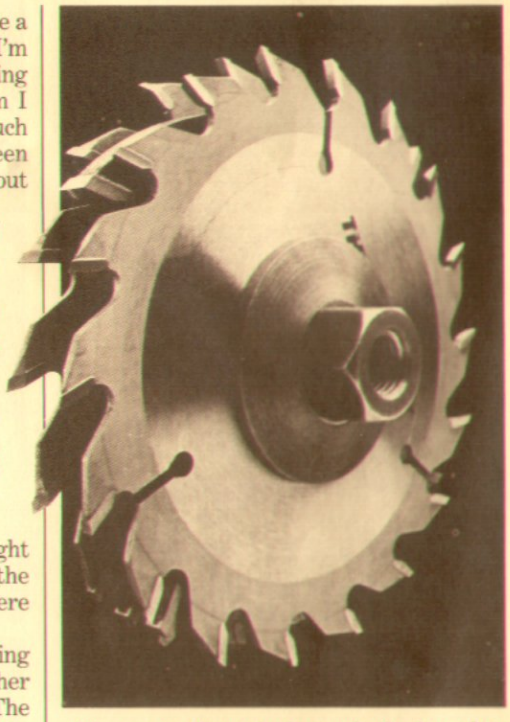

EVALUATING QUALITY. In evaluating the quality of a dado blade's performance in all of these applications, the groove bottom is equally (or more) important than the top edges. So look at the bottom first. It should be flat and square with the sides. Then look at the edges; they should be sharp with no splintering. (Make this test across the grain where tearing is most likely to occur. Even the lower quality blades leave sharp edges when ploughing with the grain.)

A VARIETY OF DADO BLADES

There are two basic types of dado blades — the stack set and the adjustable dado blade. Both types perform the same three-part job. That is, to cut a groove the dado blade must pare the sides smooth and leave the edges clean. It must plane the bottom flat and square to the groove sides. And, it has to remove the waste from the groove itself.

We saw no purpose in trying to test every dado blade on the market — there's too much overlap within the basic types. So we selected some readily available models that we're already familiar with in our shop. We checked out the stack sets first.

STACK DADO SETS

A stack dado gets its name because a set consists of six or seven individual pieces that are stacked together on the saw arbor. Actually, all of these components fit into two categories — a pair of outside cutters and a collection of chippers.

THE CUTTERS. The cutters are the precision components of the stack dado set. Their job is to define the edges and make the straight, vertical sides on the grooves. They look like small circular saw blades.

THE CHIPPERS. The chippers are two-toothed blades that fit between the cutters. The chippers control the width of the groove, remove the waste, and plane the bottom of the groove flat.

Most stack sets come with five chippers; four are 1/8" thick and one is 1/16" thick. The width of the groove being cut is controlled by the number of chippers added to the stack. Since each of the cutters cuts a 1/8" groove, the stack set can cut grooves from 1/4" to 13/16" wide in 1/16" increments.

STEEL STACK SETS

We tested both high-speed steel and carbide-tipped stack sets, evaluating two different types within each category.

Note: Prices quoted in this article are suggested retail. Most dado sets go on sale from time to time, see Sources, page 24.

FLAT STEEL SETS. Flat steel stack sets are the least expensive. The Sears 8" set (9 HT 32475) is typical of this type, see Detail 1. It's priced at $34.99 in the Sears 1985/1986 Power and Hand Tool Catalog.

The cutters on this Sears set have a simple tooth configuration that consists of five cutting teeth, a deep gullet, then a raker tooth to remove the sawdust.

The cutting teeth are ground and set in groups of five. That is, five teeth are beveled and set (bent) in one direction. This group is followed by an unset raker tooth with a flat top. Then the next group of five cutting teeth is beveled and set in the opposite direction.

The purpose of alternating the bevel and set of groups of teeth is to provide clearance between the sides of the groove being cut and the blade plate. There's a negative effect, though. Because the points of the cutting teeth extend beyond the path of the points of the raker teeth, the corner of the groove bottom is not sharp and square, see Details 1A and 1B.

The Sears 8" flat stack set left a groove bottom that was unacceptable at the corners. And it tended to tear the grain on the edges. The problem with the edges could be corrected with sharpening. But, the problem with the corners of the bottom is a design flaw — it could be lessened, but not eliminated. While this set might be attrac-

tive because it's so inexpensive, it's really only suitable for framing and construction, not for cabinet-quality joinery.

HOLLOW-GROUND STEEL SETS. Another Sears dado, the 8" "Smooth-cut" (9 HT 3253/$44.99), is representative of hollow-ground dadoes, see Detail 2. Hollow-ground steel sets get their name because the cutter's plate rim is ground so it's thinner toward the plate center. This relief allows the teeth to be ground without any set and (in theory) leaves clearance between the plate and the side of the groove.

The cutters on a hollow ground stack set cut smoother and cleaner than the cutters on a flat set. And, because the teeth are unset and have a flat top, the corner where the groove side and bottom meet is square and sharp. But, while this set cuts smoother than the flat set, it has two distinct problems.

The first problem is it burns badly, especially when ploughing with the grain in dense woods like cherry and maple. This problem seems to be caused by the very small teeth. The gullets between the teeth fill with sawdust. The accumulated sawdust increases friction, which makes the blade burn the wood.

The second problem becomes apparent when the two cutters are used without chippers to cut a ¼" groove. Because there's a space between the cutters, a small sliver of wood is left in the bottom of the groove, see Detail 2A. This sliver has to be removed either with a chisel or by making another pass.

Sharpening the hollow-ground stack set does little to improve its performance. Its teeth continue to fill, so burning remains a problem. And the sliver left in the groove bottom becomes wider each time the dado set is sharpened.

Although hollow-grinding improves the performance of regular saw blades (and gives them a higher quality image), in the case of dado sets hollow-grinding is actually a detriment.

CARBIDE-TIPPED STACK SETS

The price jump from steel to carbide-tipped stack dado sets is a big one. But, so is the improvement in performance.

CONVENTIONAL CARBIDE-TIPPED SETS. The 6" Oldham (600-CCD/$119.00) and the 8" Sears (9 HT 3264/$89.99) are typical representatives of conventional carbide-tipped stack sets. The cutters on both sets are similar to carbide-tipped combination blades, see Detail 3. The cutters on the Oldham set have 18 teeth; there are 22 on the Sears cutters. The teeth on both have an alternate top bevel. The Sears has a raker tooth between the beveled teeth; the Oldham does not.

The teeth on both sets have a steep hook angle like a rip blade. This steep hook angle helps pull the workpiece into the blade and down against the saw table. It "feeds" smoothly. And, burning isn't a problem with either of these dado sets.

Both the Oldham and the Sears perform better than the steel sets, but there is a marked difference between them. The Oldham shears the wood fibers cleanly without tearing the edges on cross-grain cuts. But, because there's no raker tooth to clean up between the bevel teeth, a tiny ridge is left in the bottom near each corner, see Details 3A and 3B. While this tiny ridge doesn't effect the quality of dadoes, grooves, rabbets, and tenons, it would result in less-than-perfect box joints.

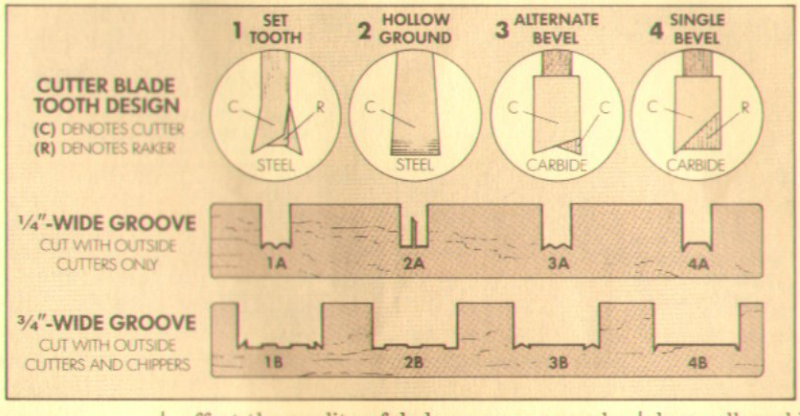

The Sears blade's performance is sort of a good news, bad news story. It makes very square groove bottoms, but tears the wood fibers badly on cross-grain cuts. Both of these traits result from incorrect sharpening. The raker teeth are exactly the same length as the bevel teeth. If the blades were sharpened with the rakers honed slightly lower than the bevel teeth, the tearout would stop.

PREMIUM CARBIDE-TIPPED SETS. One step up are the industrial-quality dado sets, see Detail 4. The 6" Freud (DS306/$146.90) and the 6" Delta (35-550/$165.00) are representative of this category.

On both sets the cutters are unique — they have right and left sides. The teeth on one cutter are all ground at one angle and the teeth on the other cutter are ground at the opposite angle.

The point of each tooth is actually scoring the wood, see Details 4A and 4B. The score line is just a hair deeper than the full depth of the raker tooth and the chippers. This line keeps the edge of the groove clean by preventing the wood fibers from tearing out past the line as they're removed by the rakers and the chippers.

This scoring action is characteristic of cutters with alternate bevel teeth, too. But, the inner score mark they leave detracts from the smoothness of the bottom. On these premium blades there's just a score line on the outer edge of each groove. With a correctly sharpened set, this results in a very flat bottom.

The Freud and Delta sets with the single-angle grind produce very clean grooves. Both fulfill all dado applications, including rabbets, tenons, and box joints. Since they're priced about the same, it's hard to give the nod to one or the other.

OBSERVATIONS

After putting the stack dado sets through their paces, I made several observations that would influence my buying decisions.

STEEL VS. CARBIDE. The steel stack sets don't perform as well as the carbide-tipped sets. The problem isn't a matter of sharpness (steel can be made sharper than carbide — it just doesn't hold an edge as long).

The problem seems to be design. The steel blades are economy tools. They've been designed with the manufacturer, not the end user, in mind.

SHARPENING. As for the carbide-tipped sets, proper sharpening is the key to the set's performance. Out-of-the box performance problems all could be traced back to careless factory sharpening.

Careful sharpening means more than getting the carbide tips sharp. It means getting the tips uniform and making sure the relationship of the teeth is correct.

The correct relationship means the raker teeth and the chipper teeth are exactly the same length. The bevel teeth should be just a hair longer. A carbide-tipped stack dado sharpened to these specifications will perform all of its jobs well.

SIZE. One of the other considerations in buying a dado set is size. Dado sets are generally available in 6", 7", and 8" diameters. Is bigger better? I don't think so.

To begin with, the 6" dado blade will cut a 1½"-deep groove on the Sears table saw. This is more than adequate for any project imaginable.

Considering that and the fact that the 6" dado sets cost less, we see no sense in buying an 8" dado set.

CONCLUSIONS

So, which set is best? The Oldham set is a good value. It costs considerably less than the premium sets, yet performs all functions adequately except for making box joints.

But for all-around use, it's hard to beat the Freud or Delta. Both perform very well out-of-the-box. Their prices are high — but both are often heavily discounted. They should perform excellently for a lifetime.

ADJUSTABLE DADO BLADES

An alternative to the stack set is the adjustable dado blade. It has a lot of a appeal because it's a single tool, rather than a collection of components. It can be adjusted to cut grooves from ¼" wide to 13/16" wide with infinite adjustments within this range. And these adjustments can be made without removing the dado blade from the saw.

Does the adjustable dado blade measure up to these claims? We have five models and our conclusion is "yes, but . . ." The "but" is that it doesn't produce a first-rate groove.

MODELS TESTED. One of the five models we have is the dado blade that generated this article — the 16-tooth Sears (9 HT 3263/$34.99). Three others are the Delta 12-tooth "Micro-Set" (34-959/$36.10), the Acu-Edge 8-tooth "Tru-Cut" ($49.95), and the 8" Freud 24-tooth (AD800/$62.90). The fifth dado blade is one we just got in: the Sears "Excalibur" (9 HT 32708/$99.99).

WHAT DO THEY LOOK LIKE? All of these adjustable or "wobble" dado blades look like a carbide-tipped saw blade that's mounted to a thick hub. What makes them unique is that the hub can be turned so the blade tilts at an angle to the arbor. Adjusting this angle varies the width of the groove cut.

HOW DO THEY WORK? You can go through a lot of mental gymnastics trying to figure out how a wobble dado blade works. But the secret is that it doesn't really wobble.

What happens is this: The blade is mounted between two angled disks that are part of the hub. These disks tilt the blade so each tooth is shifted out from the vertical axis. Although it appears to wobble, in reality each tooth stays a specific distance out from the axis as it rotates around the arbor, see Fig. 1.

Note: The Sears "Excalibur" is unique in that it has two 24-tooth blades. The blades are mounted on a single hub at opposite angles to the arbor. In effect, it's two dado blades running on the same arbor.

QUALITY OF THE CUT

No matter how it works, the quality of the cut is still the primary concern. The side walls of a groove cut by an adjustable dado blade are vertical, but the edges aren't as clean as those cut by a stack set. This is a result of each tooth having its own path.

Each time the dado blade revolves, the outermost tooth on each side is the only one cutting the edge of the groove. So, no matter how many teeth the dado blade has, the edge of the groove can't be improved.

The groove bottom cut by an adjustable dado is generally smooth. And the more teeth it has, the smoother the bottom. This is because each tooth cleans up the edges of the path cut by the adjacent tooth.

This smooth groove bottom leaves the impression that the dado is performing better than it really is. What's much more important is the bottom profile.

THE BOTTOM PROFILE

The bottom profile cut by an adjustable dado blade is rarely flat. Usually, it's angled, concave, or convex. These profiles result from the geometry of the dado blade and by the way it's sharpened.

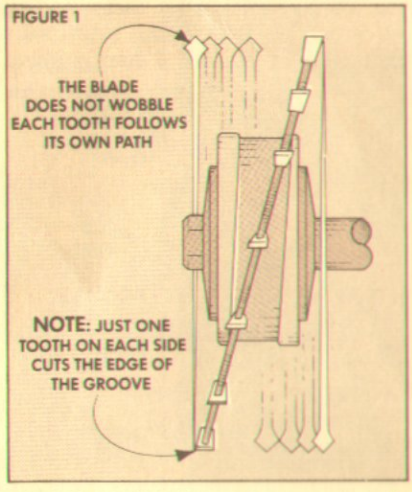

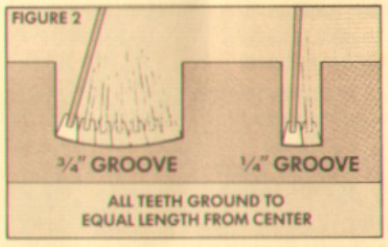

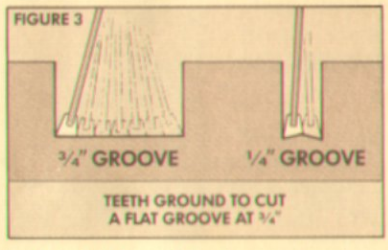

ANGLED BOTTOM. The Sears 16-tooth adjustable blade produces an angled bottom. This is the result of careless grinding — the teeth on one side of the blade are ground longer than the opposite teeth cutting the other side of the groove.

CONCAVE BOTTOM. The Delta and Freud adjustable dado blades leave a concave groove bottom, see Fig. 2.

The concave shape results from a dado blade sharpened like a saw blade. That is, the distance from the center to the tips is the same on all teeth. When a blade with equal-length teeth is angled to produce a wider cut, the groove bottom will have a curve that's the same arc as the blade.

FLAT BOTTOM. The Acu-Edge dado blade makes a flat-bottomed groove at the ¾" setting, see Fig. 3. A flat bottom can be produced at a *specific width* if the dado blade is *specially* ground. But the bottom will be flat only at that setting. This is because the special grinding leaves the teeth longest on the teeth in the outer path.

CONVEX BOTTOM. When the Acu-Edge dado blade is adjusted to make a narrower groove, a convex (ridged) bottom results.

The convex bottom is less objectionable than the concave bottom. It's easy to flatten with a chisel. Basically, what you're doing is planing down the center ridge to the depth at the corners. When trying to flatten a concave bottom, it's almost impossible to keep the groove depth uniform on both sides.

DOUBLE-CONCAVE. The Sears "Excalibur" left a double-concave bottom profile. This is because both of the blades are sharpened like saw blades, so side-by-side arcs are left behind.

We felt the double-concave bottom was the most difficult profile to flatten.

PROPER SHARPENING

To properly sharpen an adjustable dado, as much (or more) attention must be paid to geometry as to edge sharpness.

FACTORY SHARPENING. Poor factory sharpening was the cause of all the problems we experienced with adjustable dado blades. The quality of the cut is almost totally dependent on the attention the blade gets on the sharpening machine. To prove this to myself, I had our poorest performer — the 16-tooth Sears blade — custom sharpened.

CUSTOM SHARPENING. When I took the Sears 16-tooth adjustable dado blade to our local sharpening shop, I explained that it was leaving an angled bottom. Then I asked the sharpener to regrind the blade so it would leave a flat bottom at ¾". (I could deal with the center ridge that would be left at narrower settings.)

After sharpening, the Sears dado blade cut a flat-bottomed groove at ¾". The cost of resharpening was $22.00.

THE FINAL CHOICE

The Acu-Edge adjustable dado is the only model tested that performed properly right out of the box. This is because the manufacturer understands sharpening geometry. (They even include detailed sharpening instructions with the blade.)

Based on our experience, I prefer the Acu-Edge of all the adjustable dado blades. But, any of the other blades will perform as well after custom sharpening.

Caution: We feel the Freud 8" AD800 is not safe for use on table saws. This is because the hub is too thick to allow the nut to be fully threaded on the arbor shaft.

ADJUSTABLE VS. STACK SET. When making the choice between adjustable dadoes and carbide-tipped stack sets, I prefer stack sets. They cut smoother edges than adjustable sets. And by placing cardboard spacers between the chippers, it's not hard to fine-tune the groove width.

I'm willing to pay more for a tool that produces the quality I expect — and will probably outlast me.

Shop Notes

THIN WOOD

All of the projects in this issue use thin stock — ½", ⅜" and even ¼" thick. Although ½"-thick stock is sometimes available at hardwood lumber yards, anything thinner than that is difficult to find "off the shelf."

The solution is to plane it down yourself. Of course, if you have a thickness planer, that's an easy task. The alternative is to resaw the stock to a thickness that's 1/32" to 1/16" over the final thickness. Then use a hand plane to smooth it the rest of the way.

The problem I find when doing this is the hassle of constantly checking the thickness of the piece while at the same time making sure it's level (an even thickness all the way across the piece).

On small pieces it's worth making a simple jig to guide the plane to the proper thickness. Just cut a piece of plywood as a base and place the resawn workpiece on the plywood. Then rip two 1½"-wide strips to the final thickness you want for the workpiece. Tack these two strips beside the workpiece, countersinking the brads.

Now just plane the workpiece down, angling the plane slightly so the heel and toe are

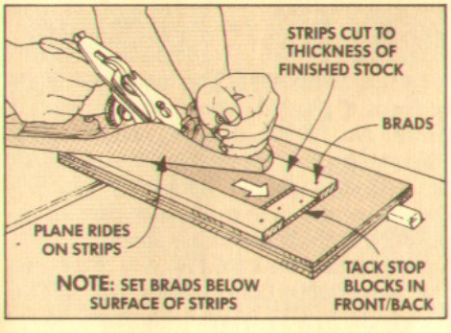

over the guide strips. As the planing progresses, do not plane the strips. They will stop the plane when the workpiece is planed down to their thickness.

CUTTING INLAY STRIPS

The procedure I use for making thin (1/32"-thick by ⅛"-wide) inlay strips is similar to the methods we've previously shown for cutting small strips. But there is one difference — these inlay strips are *very* narrow and thin. They're the kind of pieces that slip down into the slot in the saw's insert plate. And you have to dig through the sawdust under the saw to find the strips.

INSERT PLATE. One way to solve the problem is to make a wooden insert with a small blade slot. (See *Woodsmith* No. 35, page 23 for more information.)

Cut the insert to shape and clamp it into the recess in the table saw. Then raise the blade to cut a slot as wide as the blade.

CUTTING THE STRIPS. Once the insert is in place, the inlays can be cut on the edge of a piece of scrap with a fine-toothed blade. I

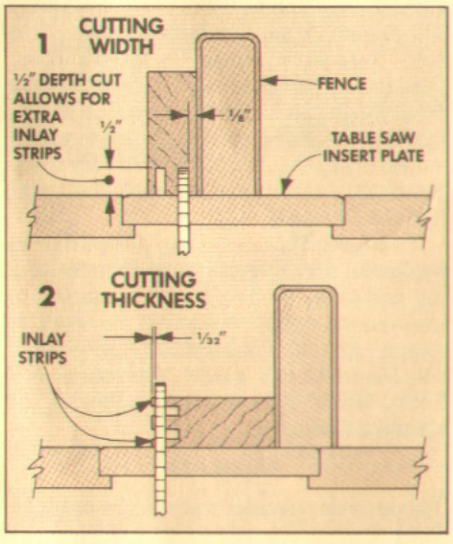

used a short piece (10") to limit the problems if the piece is bowed or twisted.

To cut the inlays, start by setting the distance between the fence and the blade to equal the desired width of the inlay. In my case, I set it to cut a ⅛"-wide strip. Then set the blade height to about ½".

Now make a pass and then flip the piece around so the opposite face is against the fence and make another pass, see Step 1.

Reset the saw so the thickness cut is taken on the outside (left) side of the blade, see Step 2. The thickness should be a little more than the thickness of the veneer you're using so it can be sanded down flush after it's glued in.

When the second cut is made, the thin strips fall on the "waste" side where they can't kick back. And the small slot in the wooden insert prevents the strips from slipping down below the saw.

OIL ON VENEER?

We recently received a call from a subscriber in Akron, Ohio who was planning to veneer a project and finish it with Watco Danish Oil. But he was concerned that the oil might soften the contact cement and lift the veneer.

Since we were planning to use veneer on a couple projects in this issue, I asked Bob Webb, owner of Bob Morgan Woodworking Supplies, if he had heard of any problems with oil finishes on veneer.

"We only get a complaint or two every couple months about veneers lifting as a result of finish," Bob said. "Usually the complaints are coincidental with seasonal changes. If there were lots of problems, I wouldn't be in business."

PROBLEMS WITH OIL. But Bob admitted that there is a possibility of penetrating oils soaking through a thin veneer and attacking the adhesive. And Watco Oil is "one of the worst since it penetrates so far down and contains a high percentage of solvent."

PAPER-BACKED VENEER. One solution is to use a paper-backed flexible veneer since the paper provides somewhat of a barrier between the finish and the adhesive. (Bob Morgan carries several flexible veneers: Bob Morgan Woodworking Supplies, 1123 Bardstown Road, Louisville, KY 40204; 502-456-2545.)

Webb also recommends another type of veneer he carries that uses a pressure-sensitive adhesive. "I can't say it's totally immune to anything," he says, "but it's almost."

FOIL-BACKED VENEER. We also talked to Glenn Docherty at Albert Constantine and Son, Inc. He suggested a new product called SanPly-4. It consists of veneer backed with a layer of paper, then a layer of foil, and finally another layer of paper. The foil acts as a barrier to the finish.

The only disadvantage we see with SanPly-4 is that the wood layer is very, very thin. You have to be careful so you don't sand through it.

SanPly-4 is available in nine species and two sizes (24"x96", 36"x96") from Albert Constantine and Son, Inc., 2050 Eastchester Road, Bronx, NY 10461; 800-223-8087.

DIFFERENT GLUES. Another solution is to use a glue other than contact cement. Yellow glue (aliphatic resin) resists oil finishes better than contact cement. (Yellow glue will work on a small project when the veneer can be easily clamped, but isn't practical for large sheet work without a veneer press.)

APPLYING THE FINISH. The type of veneer or glue used is only half the story. Just as important is how the finish is applied. There's a temptation to continually douse the wood to add to the sheen. But this allows the solvents to penetrate the veneer and attack the adhesive.

It's best to let the adhesive cure for at least 48 hours before applying the finish. Then put on a couple light sealing coats of oil and let them dry *thoroughly* (a couple days) before applying additional coats.

One other caution: If you're finishing veneer with lacquer (including Deft Clear Wood Finish), don't put on a heavy coat of highly-thinned lacquer since most contact cements dissolve in lacquer thinner. Seal it with a very light coat of lacquer sanding sealer or the lacquer itself. Then when it's dry, apply light top coats.

Sources

RECIPE CARD BOX

You can order the hardware for the recipe card box from:

THE WOODWORKERS' STORE, 21801 Industrial Boulevard, Rogers, MN 55374; 612-428-2199 (Note: $7.50 minimum cash order. Catalog: $2.00). *Porcelain Knobs* (2), 1" dia., Order No. E1702, $1.10 each. *Hinges* (1 pair), brass, 1½" long, ⅞" open width, ½" screws included, Order No. D1221, $1.60 pair. *Screw Hole Buttons* (4), ½", Oak, Order No. B1013, $1.70 per 50.

SMALL BOX/BURL VENEERS

Burl veneers come in odd-shaped pieces and are available from a variety of sources. Check the catalogs listed below for specific species, sizes, and prices. You can order the burls and veneer glue we used on the small boxes from:

ALBERT CONSTANTINE AND SON, INC., 2050 Eastchester Road, Bronx, NY 10461-2297; 800-223-8087 (Note: $10.00 minimum cash order. Catalog: $1.00). *Burl Veneer*, approx. 10" x 10", 3 sq. ft. minimum order. (We used Carpathian Elm Burl for the square box, Order No. V16, $1.25 per sq. ft., and Maple Burl for the hexagon box, Order No. V52, $1.25 per sq. ft.). *Veneer Glue*, pint, Order No. 12VGP, $4.45.

Albert Constantine and Son also offers a *Burl Veneer Assortment*. It includes 2 sq. ft. of seven different burls. Order Special No. CVS 221, $14.25.

Other mail order sources of burl veneers include:

THE WOODWORKERS' STORE, (see address above).

BOB MORGAN WOODWORKING SUPPLIES, 1123 Bardstown Road, Louisville, KY 40204; 502-456-2545 (Catalog: $1.00).

CRAFTSMAN WOOD SERVICE COMPANY, 1735 W. Cortland Ct., Addison, IL 60101; 312-629-3100 (Catalog: $1.00).

ARTISTRY IN VENEERS, INC., 450 Oak Tree Ave., South Plainfield, NJ 07080; 201-668-1430 (Catalog: $1.50).

INLAY STRIP. When it came time to find one ⅛"-wide x 16"-long inlay strip for the box, we ran into a problem. Albert Constantine and Son has a minimum order of a dozen 36"-long pieces (*Natural Wood Strips*, see catalog for species, Order No. DOV9, $6.00 per 12.).

The Woodworkers' Store (address above), will sell one 36"-long strip but they have a minimum $7.50 total cash order (*Natural Wood Strip*, 1/28" thick x ⅛" wide x 36" long: White Maple, Order No. A8123, $.34 each; Black, Order No. A8120, $.50 each; Rosewood, Order No. A8121, $.52 each; Satinwood, Order No. A8122, $.52 each).

So we decided to make our own strips out of scrap, see Shop Notes, page 23.

DECORATIVE INLAYS. Still another possibility would be to use a decorative inlay. They're available in a wide variety of designs from all of the sources listed above.

FELT AND ADHESIVE. We purchased the felt for the box liner and pad at a local fabric store. Spray adhesives are available at art supply stores. (Note: Don't try to use wood glue or contact cement. They soak into the felt.)

Two basic types of spray adhesives are available: adhesives for permanent mounting and those for temporary mounting. A permanent adhesive should be used to mount the felt. We used 3M Spray-Ment. 3M Photo-Mount would also work. (3M Spray-Mount is a temporary adhesive and should not be used.)

BRIEFCASE

You can order the hardware for the briefcase from:

THE WOODWORKERS' STORE, (address above). *Briefcase Hardware Kit*, includes locks, liner, hinges, and supports, Order No. A9190, $39.95. *Genuine Leather Handle*, specify Dark Brown (Order No. D9800) or Light Brown (Order No. D9801), $9.95.

You need a piece of flexible veneer that measures at least 14" x 72" for the briefcase. We made a couple briefcases out of teak and rift cut white oak and ordered the veneer from:

ALBERT CONSTANTINE AND SON, INC., (address above). *Flexible Veneer*, 18" x 96", Specify Teak (Order No. 11FV15) for $34.60 or White Oak, rift cut, (Order No. 11FV13) for $27.00. (See the catalog for other species available.)

Flexible veneers are also available from The Woodworkers' Store, Bob Morgan Woodworking Supplies, Craftsman Wood Service Company, and Artistry in Veneers, Inc. (See addresses above).

We ordered the tung oil finish for the briefcase from:

GARRETT WADE COMPANY, 161 Avenue of the Americas, New York, NY 10013; 800-221-2942 (Catalog: $3.00). *Sutherland Welles' Polymerized Tung Oil Sealer*, Order No. 99R01.01, $14.45 per quart. *Sutherland Welles' Polymerized Tung Oil (Low Luster)*, Order No. 99R02.01, $15.90 per quart.

DOVETAIL ROUTER BIT

We used a ¼" dovetail router bit to make the mitered dovetail key joint on the recipe card box and drawers. (See article about this joint on page 10). We haven't been able to locate a *¼" carbide-tipped* dovetail bit. They're all high-speed steel.

But for this application, high-speed steel seems to work fine. We used the ¼" dovetail bit (No. 9 HT 2553, $4.89) from the 1985/86 Sears Power and Hand Tool Catalog. Black and Decker also offers a ¼" dovetail bit (No. 59078, $4.07) at local Black and Decker dealers. A ¼" Porter-Cable dovetail bit is also available from:

ALBERT CONSTANTINE AND SON, INC., (address above), *Dovetail Bit*, ¼", Order No. 43639, $5.25.

One caution: For this project, don't use a 9/32" "gluing" dovetail bit -- the kind with the extra flutes that create an expansion slot for excess glue, see *Woodsmith* No. 31. (These bits are available from Bosch and Vermont American). The expansion slot would show on the joint.

DADO BLADES

Prices quoted in the article on dado blades are recommended retail prices. Fortunately, most of these sets can be purchased on sale or at a discount through mail order catalogs.

FREUD STACK DADO SET. The industrial quality *Freud 6" Carbide-tipped Stack Dado Set* (Order No. 147-252, $99.00) is available from Woodworker's Supply of New Mexico, Dept. WS4, 5604 Alameda, NE, Albuquerque, NM 87113; 800-645-9292 (Catalog: Free).

DELTA DADO SETS. The industrial quality *Delta 6" Carbide-tipped Stack Dado Set* (Order No. 35-550, $115.50) and the *Delta Adjustable Dado* (Order No. 34-959, $36.10) are both shown in the Delta Accessory Sale Catalog available from Woodworker's Supply of New Mexico, address above.

ACU-EDGE TRU-CUT. *The Acu-Edge Tru-Cut Adjustable Dado* (Order No. 09T31-RE, $49.50 ppd.) is available from Woodcraft Supply, Dept. WS4, 41 Atlantic Ave., P.O. Box 4000, Woburn, MA 01888; 800-225-1153 (Catalog: Free).

OLDHAM CARBIDE-TIPPED STACK DADO. *The Oldham 6" Carbide-tipped Stack Set* (Order No. 600-CCD, $89.00) is available from Birmingham Saw Works, Dept. WS4, 910 North 28th St., Birmingham, AL 35201; 800-621-1316 (Catalog: Free).

SEARS DADO SETS. The Sears dado set prices and order numbers listed below are from the Sears 1985/86 Power and Hand Tool Catalog. Watch for sale prices.

Standard-cut Stack Dado Set, 8", flat steel, Order No. 9 HT 32475, $34.99. *Smooth-cut Stack Dado Set*, 8", hollow-ground steel, Order No. 9 HT 3253, $44.99. *Carbide-tipped Stack Dado Set*, 8", Order No. 9 HT 3264, $89.99. *Adjustable dado*, 16-tooth, Order No. 9 HT 3263, $34.99. *"Excalibur" E-Z Adjust Dado*, twin blade, Order No. 9 HT 32708, $99.99.